Firestone AIRSTROKE™ ACTUATORS

END CLOSURE OPTIONS

Style Number	Maximum Diameter at 7 BAR (mm)	Minimum Height (mm)	Maximum Stroke (mm)	Maximum Usable Height (mm)	7* BAR Force† at Stroke of 25 mm (kN)	50% of Maximum Stroke	Maximum Stroke (kN)	4 Ply Style Number	Pg. No.	Bead Plate Type	Dim. A (blind nut centers) (mm)	Dim. B (mm)	Bead Ring Type	Dim. C (bolt circle diameter) (mm)	Number of Bolts (each ring)
POLYACTUATOR															
50-P-10	50	11	10	22			37.4		34	SEE INDIVIDUAL DATA PAGE					
70-P-13	70	14	13	27			115.0		35						
SHAPED SLEEVE															
1M1A-0	86	38	36	74	2.5	0.0	2.2		36						
1M1A-1	86	38	60	98	2.8	0.0	2.1		37						
2M1A	88	64	86	150	2.7	2.7	2.1		38						
2M2A	59	30	26	56	0.8	0.0	0.7		39						
SINGLE CONVOLUTION															
16	152	48	36	84	5.0		2.5		40	1	45		4	114	6
131	165	51	53	104	7.6		3.5		41	1	45		4	114	6
160	183	53	109	162	10.6		2.6		42	1	45		4	114	6
110	211	53	79	132	11.8	7.7	3.8		43	1	70		4	135	6
116	231	51	79	130	15.1	10.3	5.2	117	44	1	70		4	135	6
116-1	244	51	107	158	16.8	24.8	13.7		45	3	89	45•	4	160	8
115	257	56	79	135	20.0	25.9	12.7		46	3	158	73	4	229	12
19	328	51	89	140	37.9	48.6	26.9		47	3	158	73	4	229	12
19-.75	343	56	99	155	39.8	50.4	25.7		48	2	159		4	287	12
113	386	51	97	148	55.9	71.7	36.7	128	49	2	159		4	287	12
113-1	404	53	117	170	61.3	72.7	43.5	128-1	50	2	159		N/A	N/A	N/A
153-2	460	64	120	184	73.6	90.4	62.9		51	5	229	350	4	351	18
119§	442	51	107	158	79.2	103.7	62.1		52	5	305	419	4	419	24
121§	516	53	91	144	110.6	143.5	89.8		53	5	381	483	4	483	24
126§	569	51	112	163	146.7	191.3	179.3	138-1.5	54				4	597	32
138-1.5	709	53	125	178	245.1	315.4	179.3		55				4	597	32
148-1	950	64	122	186	442.0	563.5	414.9	148-1 is 4-Ply	56				4	830	40
DOUBLE CONVOLUTION															
268	163	76	79	155	7.8	9.6	5.3		57	1	45		4	114	6
267-1.5	165	76	102	178	8.1	11.4	7.1		58	1	45		4	114	6
224	203	71	119	190	13.3	15.5	8.2	202	59	1	70		4	135	6
26	218	71	145	216	15.3	17.8	11.2		60						
274	251	79	152	231	21.4	25.5	13.9		61						
20-2	264	76	203	279	22.5	24.3	17.4		62	3	89	73	4	160	8
22	328	81	175	256	40.6	49.2	29.2	210	63	3	158	73	4	229	12
22-1.5	348	76	206	282	43.4	51.7	30.2		64	3	158		4	229	12
21	384	81	175	256	58.1	71.9	44.9	205	65	2	159		4	287	12
21-2	406	76	221	297	64.0	76.8	46.3		66	2	159		4	287	12
233-2	394	76	264	340	61.9	78.0	46.6		67	2	159		4	287	12
28§	442	86	170	256	84.7	99.8	67.4	201	68	5	229	350	4	351	18
203§	508	89	178	267	120.8	147.2	102.1	218	69	5	305	419	4	419	24
29§	577	84	191	275	151.9	188.6	136.2	207	70	5	381	483	4	483	24
200	660	89	180	269	201.6	255.4	191.7		71				4	559	24
215	709	89	218	307	240.0	300.5	222.5	215	72				4	597	32
248-2	950	107	231	338	441.4	559.6	426.7	248-2 is 4-Ply	73				4	830	40
TRIPLE CONVOLUTION															
352	333	122	277	399	45.1	51.4	34.5		74	3	157	73	4	229	12
313	384	114	272	386	58.7	70.0	43.1	39	75	2	159		4	287	12
333	386	114	305	419	61.6	70.6	45.9		76	2	159		4	287	12
312§	462	114	264	378	88.6	102.7	69.0	314	77	5	229	350	4	351	18
323§	521	117	274	391	119.7	143.5	98.2	324	78	5	305	419	4	419	24
320§	569	114	300	414	162.0	192.3	137.4	328	79	5	381	483	4	483	24
321	709	114	343	457	244.4	294.0	208.7	321	80				4	597	32
348-3	950	140	351	490	434.7	560.2	423.6	348-3 is 4-Ply	81				4	830	40
REVERSIBLE SLEEVE															
4004	79	91	91	183	1.5	1.6	1.7		82	SEE INDIVIDUAL DATA PAGE					
7002	107	89	64	152	4.1	5.1	5.3		83						
7010	102	146	108	254	3.2	4.9	5.1		84						
7012	127	127	114	241	3.9	6.3	6.1		85						
100/70	145	114	124	239	5.3	4.4	4.2		86	1	45	4	114	6	
1T14C-1	231	127	196	323	16.0	20.6	13.5		87						
1T14C-3	229	147	208	356	16.5	20.6	14.1		88	3	89	45•	4	160	8
1T14C-7	229	203	239	442	17.2	20.6	12.9	1T28C-7	89	3	89	45•	4	160	8
1T15T-1	284	102	170	272	28.3	34.7	22.9		90	3	89	45•	4	160	8
1T15LP-3	282	152	254	406	28.6	33.9	22.3		91	3	158	73	4	229	12
1T15L-4	297	152	251	404	32.1	43.9	29.0		92	3	158	73	4	229	12
1T15M-0	325	109	178	287	32.2	44.1	30.4		93	3	158	73	4	229	12
1T15M-2	320	127	211	338	34.3	47.4	32.1		94	3	158	73	4	229	12
1T15M-4	320	152	267	419	35.4	45.5	31.8		95	3	158	73	4	229	12
1T15M-6	320	178	310	488	35.4	44.3	31.2		96	3	158	73	4	229	12
1T15M-9	323	216	384	599	36.4	45.1	33.3		97	3	158	73	4	229	12
1T19L-7	361	165	325	490	45.5	56.8	41.2		98	3	158	73	4	229	12
1T19L-11	361	203	391	594	48.6	55.1	40.4		99	2	159		4	287	12

*Values for the Polyactuators are based out of the 3.5 BAR curve. Do not use polyactuator at more than 3.5 BAR.

† To determine Airstroke force at other pressures, divide force shown by 7 bar and multiply result by new pressure.

§ This is offered with a rolled plate. When using the rolled plate end closure option, add 17.5 mm to heights shown.

•On plates with a 3/4 BSP air inlet, B dimension is 38 mm.

Firestone AIRMOUNT™ ISOLATORS

Style Number	Design Height (mm)	Load (at Design Height) at:			Natural Frequency (@ 7 BAR) f_n(Hz)	% of Isolation at Forced Frequency		
		••3 BAR (kN)	5 BAR (kN)	7 BAR (kN)		7 Hz	13 Hz	25 Hz
POLYACTUATOR								
50-P-10	DO NOT USE 50-P-10 AS AN AIRMOUNT ISOLATOR							
70-P-13	DO NOT USE 70-P-13 AS AN AIRMOUNT ISOLATOR							
SHAPED SLEEVE								
1M1A-0	65	1.0	1.8	2.5	3.4		92.8	98.1
1M1A-1	75	1.2	2.0	2.8	2.71		95.1	98.7
2M1A	DO NOT USE 2M1A AS AN AIRMOUNT ISOLATOR							
2M2A	45	0.42	0.68	0.95	3.2		93.3	98.3
SINGLE CONVOLUTION								
16	76	2.0	3.4	5.0	3.9		90.6	97.5
131	89	2.7	4.6	6.6	3.8	74.6	94.7	98.5
160	115	3.7	6	8.3	2.0	90.3	97.7	99.9
110	114	3.1	5.4	7.8	2.6	82.6	96.2	98.9
116	114	4.1	7.2	10.3	2.6	83.1	96.6	98.9
116-1	140	4.5	7.6	10.9	2.3	86.9	97.0	99.1
115	114	5.7	9.4	13.3	2.6	82.6	96.2	98.9
19	127	10.3	17.8	25.4	2.5	85.6	96.8	99.1
19-.75	140	9.1	15.9	23.0	2.5	85.6	96.8	99.1
113	127	15.6	27.1	38.9	2.3	86.9	97.0	99.2
113-1	140	18.5	31.8	45.1	2.2	87.4	97.1	99.2
153-2	150	22.4	39.0	56.6	2.0	90.3	97.7	99.4
119**	127	26.6	45.5	64.6	2.2	90.1	97.3	99.3
121**	127	31.2	55.4	81.6	2.3	87.2	97.1	99.2
126**	127	53.4	89.9	126.8	2.2	87.4	97.1	99.2
138-1.5	152	76.8	131.8	158.7	1.9	91.3	98.0	99.4
148-1	140	159	270	382.1	2.0	91.3	98.0	99.4
DOUBLE CONVOLUTION								
268	140	2.1	3.6	5.1	2.5	83.1	96.3	98.9
267-1.5	165	3.2	5.3	7.5	2.1	90.1	97.3	98.3
224	165	3.5	6.1	8.6	2.1	90.1	97.3	99.3
26	203	3.8	6.6	9.4	1.8	92.1	98.2	99.5
274	216	5.6	9.3	13.1	1.9	91.3	98.0	99.4
20-2	254	6.2	10.9	15.6	1.6	93.9	98.5	99.6
22	241	10.0	17.1	24.2	1.8	92.1	98.2	99.5
22-1.5	268	9.3	16.3	23.3	1.7	92.8	98.3	99.5
21	241	14.7	35.2	36.9	1.7	92.8	98.3	99.5
21-2	267	16.7	39.2	41.1	1.5	95.6	98.8	99.7
233-2	286	16.5	41.4	43.4	1.4	95.2	98.8	99.7
28**	241	22.2	51.6	54.1	1.7	92.8	98.3	99.5
203**	241	34.9	80.6	84.5	1.6	93.9	98.5	99.6
29**	241	47.3	108.0	113.2	1.5	95.6	98.8	99.7
200	241	64.3	147.1	154.3	1.5	95.6	98.8	99.7
215	267	76.6	175.2	183.7	1.4	95.2	98.8	99.7
248-2	279	149.2	343.9	360.7	1.4	95.2	98.8	99.7
TRIPLE CONVOLUTION								
352	343	11.3	20.0	29.1	1.3	95.9	99.0	99.7
313	330	16.0	27.6	39.6	1.4	95.2	98.8	99.7
333	373	15.9	27.8	39.5	1.2	96.8	99.2	99.8
312**	330	24.7	42.7	60.6	1.3	95.9	99.0	99.7
323**	330	35.7	62.0	87.8	1.3	95.9	99.0	99.7
320**	356	50.0	83.9	119.0	1.2	96.8	99.2	99.8
321	381	78.5	132.9	187.9	1.1	97.0	99.3	99.8
348-3	381	152.3	257.6	366.2	1.1	97.0	99.3	99.8
REVERSIBLE SLEEVE								
4004	140	0.7	1.1	1.6	1.6	93.9	98.5	99.6
7002	114	1.5	2.6	3.7	1.6	93.9	98.5	99.6
7010	203	1.4	2.4	3.4	1.1	97.0	99.3	99.8
7012	216	1.7	3.2	4.5	1.6	93.9	98.5	99.6
100/70	185	2.3	3.3	4.5	1.5	95.6	98.8	99.7
1T14C-1	254	5.9	10.1	14.3	1.4	95.2	98.8	99.7
1T14C-3	279	6.0	10.2	14.5	1.2	96.8	99.2	99.8
1T14C-7	343	6.0	10.3	14.7	1.1	97.0	99.3	99.8
1T15T-1	178	10.2	17.3	24.7	2.0	91.3	98.0	99.4
1T15LP-3	305	9.9	16.9	23.8	1.2	96.8	99.2	99.8
1T15L-4	279	12.8	22.0	31.1	1.4	95.2	98.8	99.7
1T15M-0	191	12.9	22.2	31.3	1.6	93.9	98.5	99.6
1T15M-2	241	13.8	23.5	33.3	1.4	95.2	98.8	99.7
1T15M-4	318	13.4	22.6	32.0	1.2	96.8	99.2	99.8
1T15M-6	381	13.2	22.1	31.4	1.1	97.1	99.3	99.8
1T15M-9	470	13.5	22.9	32.1	1.0	97.7	99.4	99.8
1T19L-7	380	16.8	28.4	40.2	1.2	96.8	99.2	99.8
1T19L-11	455	16.2	27.8	39.6	1.0	97.7	99.4	99.8

CONSULT FIRESTONE FOR USE AS AN AIRMOUNT†

END CLOSURES

TYPE 1 bead plate

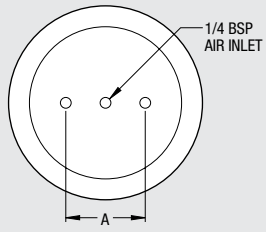

TYPE 2 bead plate

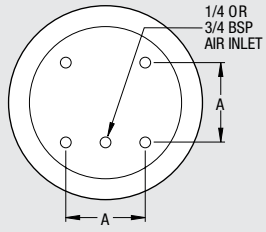

TYPE 3 bead plate

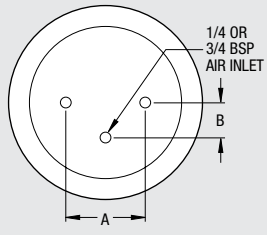

TYPE 4 bead ring

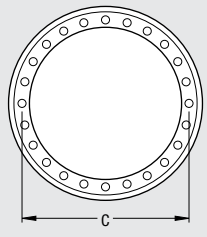

TYPE 5 bead plate

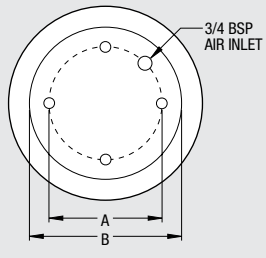

Note: Threads conform to ISO 228-1; gauge to ISO 228-2.

••Airmount isolator air pressures below 3 bar should be reviewed with Firestone.
†Except for 1M1A.

Description	Assembly Order No.
50-P-10	WA1-358-5676

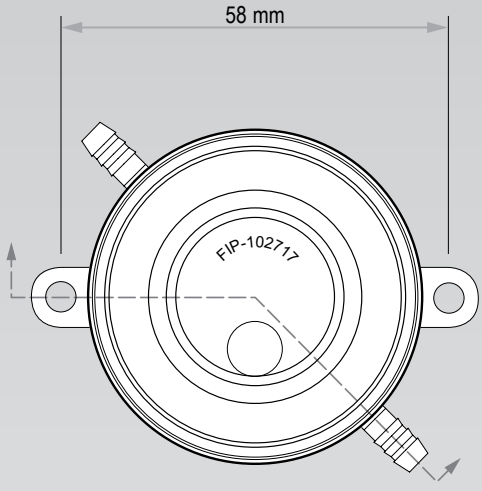

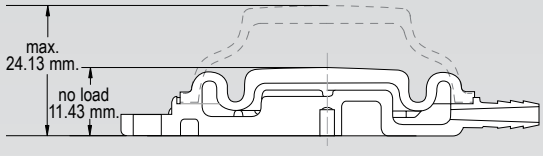

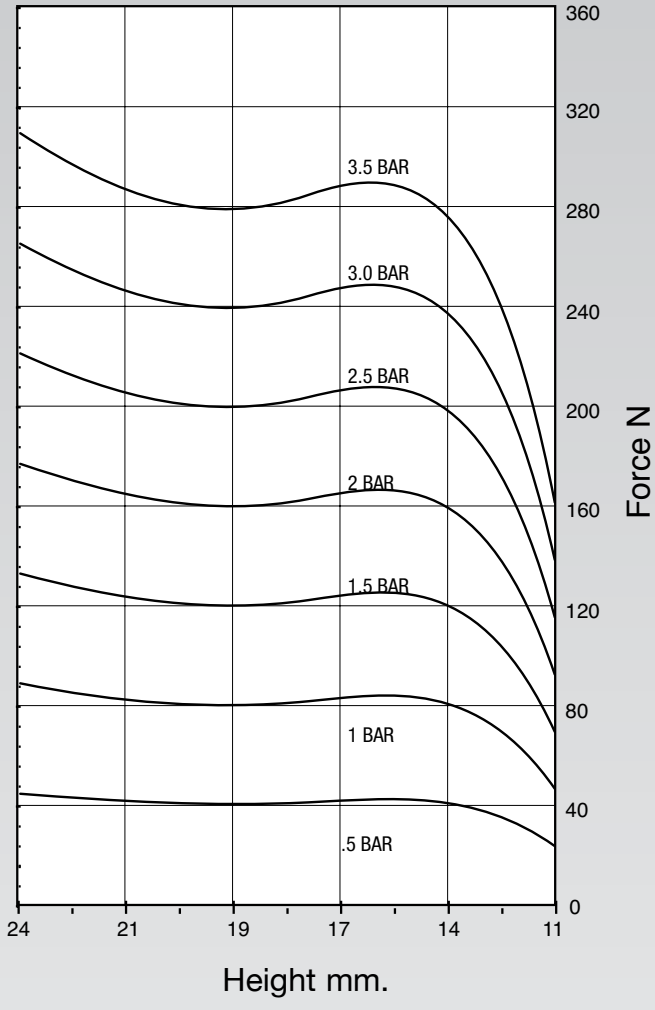

Use #8 or 4mm screws to mount through tabs.

Use .18 [4.6] ID nylon or equivalent tubing.

NOTE:

Do not use as an Airmount isolator.

Force Table (Use for Airstroke™ actuator design)

Assembly Height (mm)	Volume @ 7 BAR (cu cm)	kN Force .5 BAR	1 BAR	1.5 BAR	2 BAR	2.5 BAR	3 BAR	3.5 BAR
11		22.6	45.2	67.8	90.4	113.0	135.6	158.2
14		40.6	81.1	121.7	162.2	202.8	243.3	283.9
17		39.4	78.8	118.1	157.5	196.9	236.3	275.5
19		40.4	80.8	121.1	161.6	202.0	242.4	282.8
21		39.1	78.1	117.2	156.2	195.3	234.3	273.4
24		43.9	87.7	131.6	175.5	219.3	263.2	307.1

Description	Assembly Order No.
70-P-13	WA1-358-5674

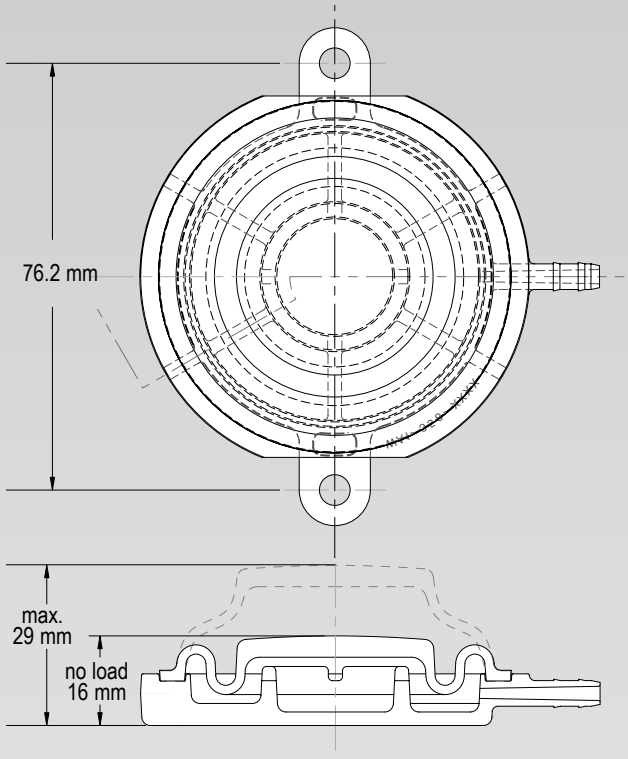

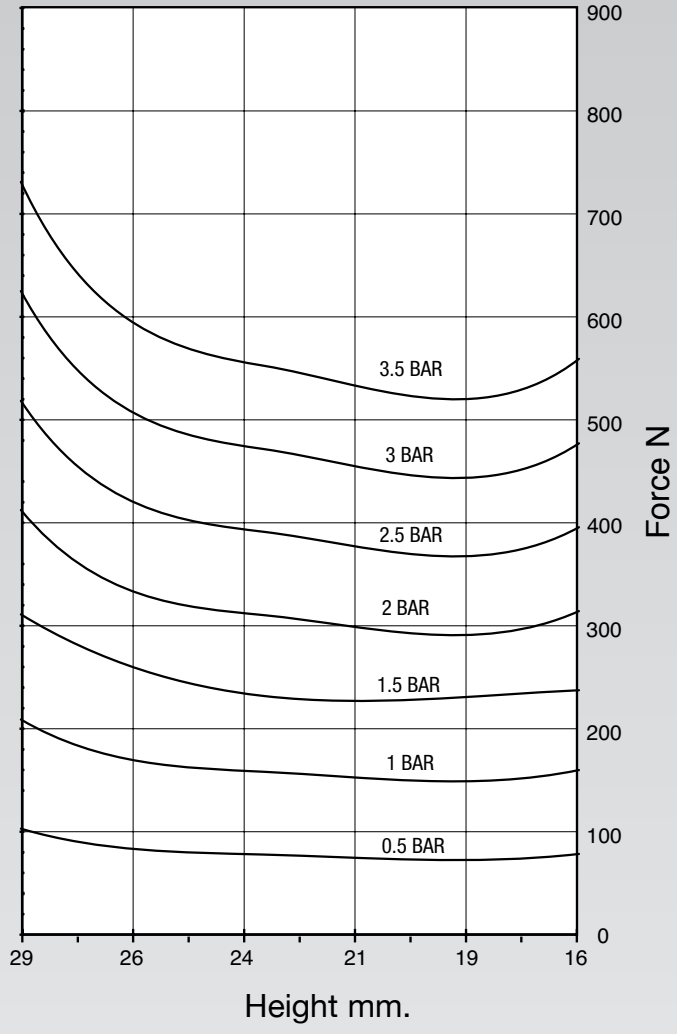

Use #8 or 4mm screws to mount through tabs.

Use .18 [4.6] ID nylon or equivalent tubing.

NOTE:

Do not use as an Airmount isolator.

Force Table (Use for Airstroke™ actuator design)

Assembly Height (mm)	Volume @ 7 BAR (cu cm)	kN Force .5 BAR	1 BAR	1.5 BAR	2 BAR	2.5 BAR	3 BAR	3.5 BAR
16		78.4	156.9	235.4	313.8	392.3	470.8	549.2
19		74.2	148.4	222.6	296.9	371.1	445.3	519.6
21		75.3	150.6	225.9	301.2	376.5	451.8	527.1
24		78.5	157.0	235.6	314.1	392.6	471.2	549.7
26		82.8	165.6	248.5	331.3	414.1	497.0	579.8
29		102.2	204.4	306.6	408.8	511.0	613.2	715.4

	Description	Assembly Order No.
Style 1M1A-0	Blind nuts, 1/8 BSP, Plastic stud	W02-M58-3000
Two Ply Bellows	Blind nuts, 1/8 BSP, Brass stud	W02-M58-3001
Assembly weight ..... .23 kg.		
Force to collapse to minimum height (@ 0 BAR) ..... 89 N.		

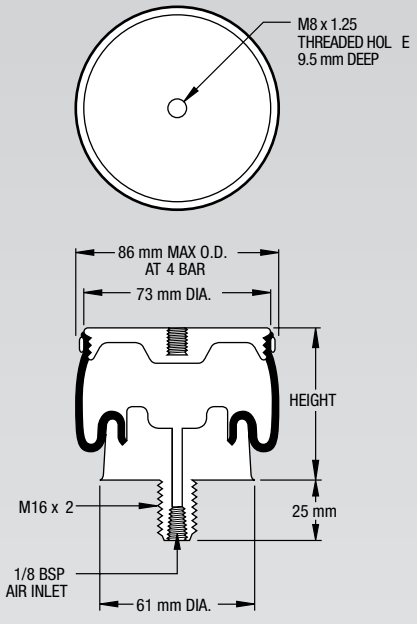

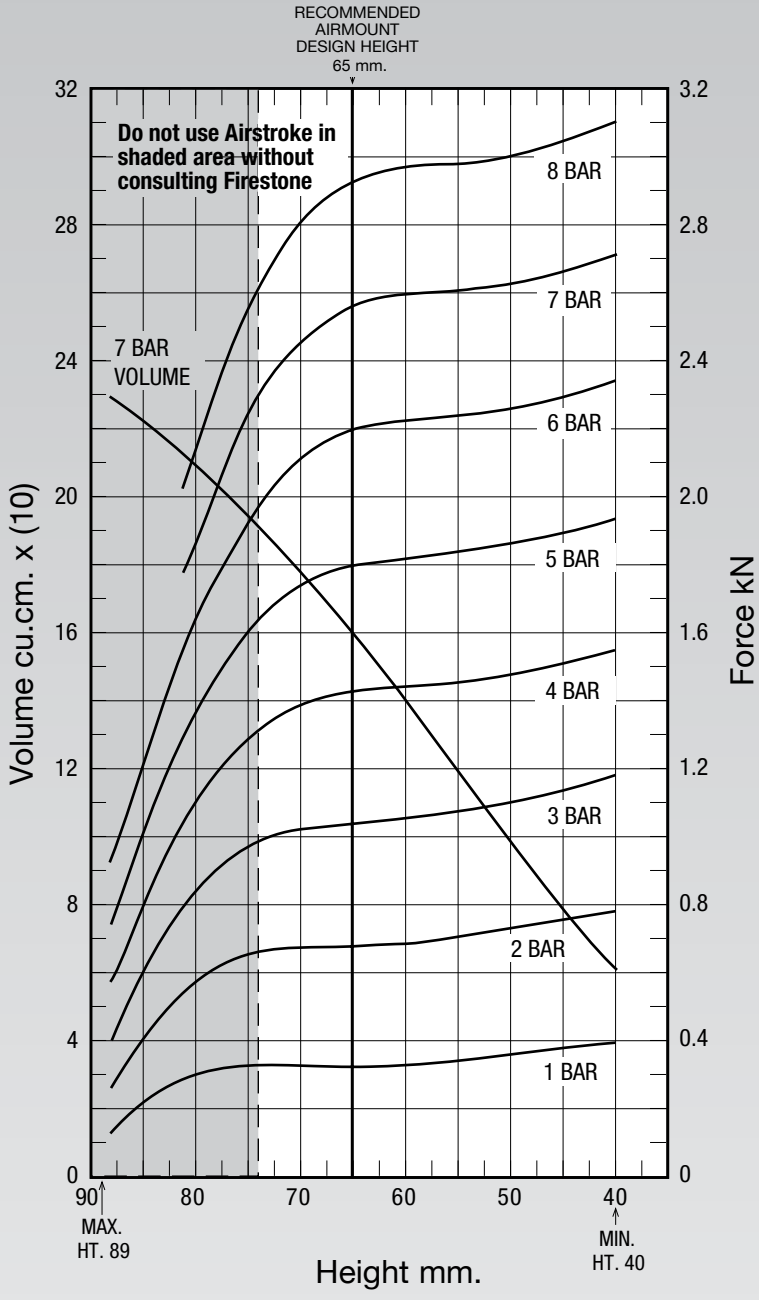

See page 12 for instructions on how to use chart.

Dynamic Characteristics at 65 mm Design Height
(Required for Airmount isolator design only)

Gauge Pressure (BAR)	Load (kN)	Spring Rate (kN/m)	Natural Frequency Hz
3	1.04	53	3.58
4	1.42	70	3.49
5	1.79	86	3.45
6	2.19	103	3.42
7	2.55	118	3.40

Force Table (Use for Airstroke™ actuator design)

Assembly Height (mm)	Volume @ 7 BAR (cu cm)	EFF Area @ 7 BAR (cm sq)	kN Force @ 3 BAR	@ 4 BAR	@ 5 BAR	@6 BAR	@7 BAR
70	180	35	1.02	1.38	1.72	2.09	2.42
65	161	36	1.04	1.42	1.79	2.19	2.55
60	144	37	1.05	1.44	1.82	2.22	2.59
55	123	37	1.07	1.45	1.83	2.23	2.60
50	103	37	1.10	1.47	1.85	2.25	2.62
45	81	38	1.13	1.50	1.89	2.29	2.65
40	64	39	1.17	1.54	1.93	2.33	2.70

	Description	Assembly Order No.
Style 1M1A-1 Two Ply Bellows	Blind nuts, 1/8 BSP, Plastic stud	W02-M58-3006
Assembly weight ..... .23 kg.		
Force to collapse to minimum height (@ 0 BAR) ..... 89 N.		

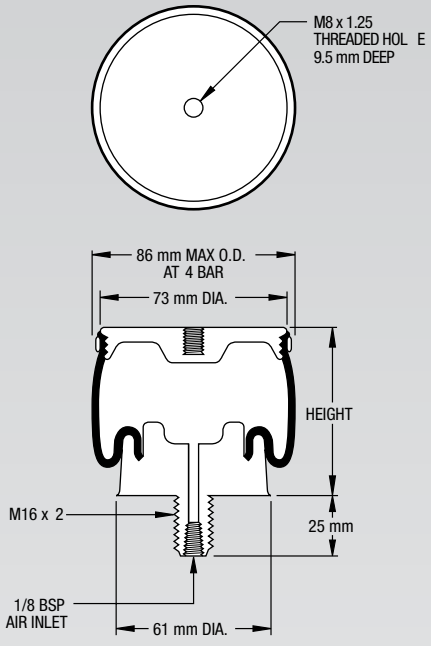

NOTE: The dotted line on the static data chart shows the force capabilities of the 1M1A-1 when attaching an additional 12 mm pedestal, provided by the customer, to the base of the air spring. If an additional pedestal is not used, the air spring will behave as the solid line depicts. Without a pedestal the rubber part will contact the ground at the height of 53 mm and could cause the rubber part to wear prematurely.

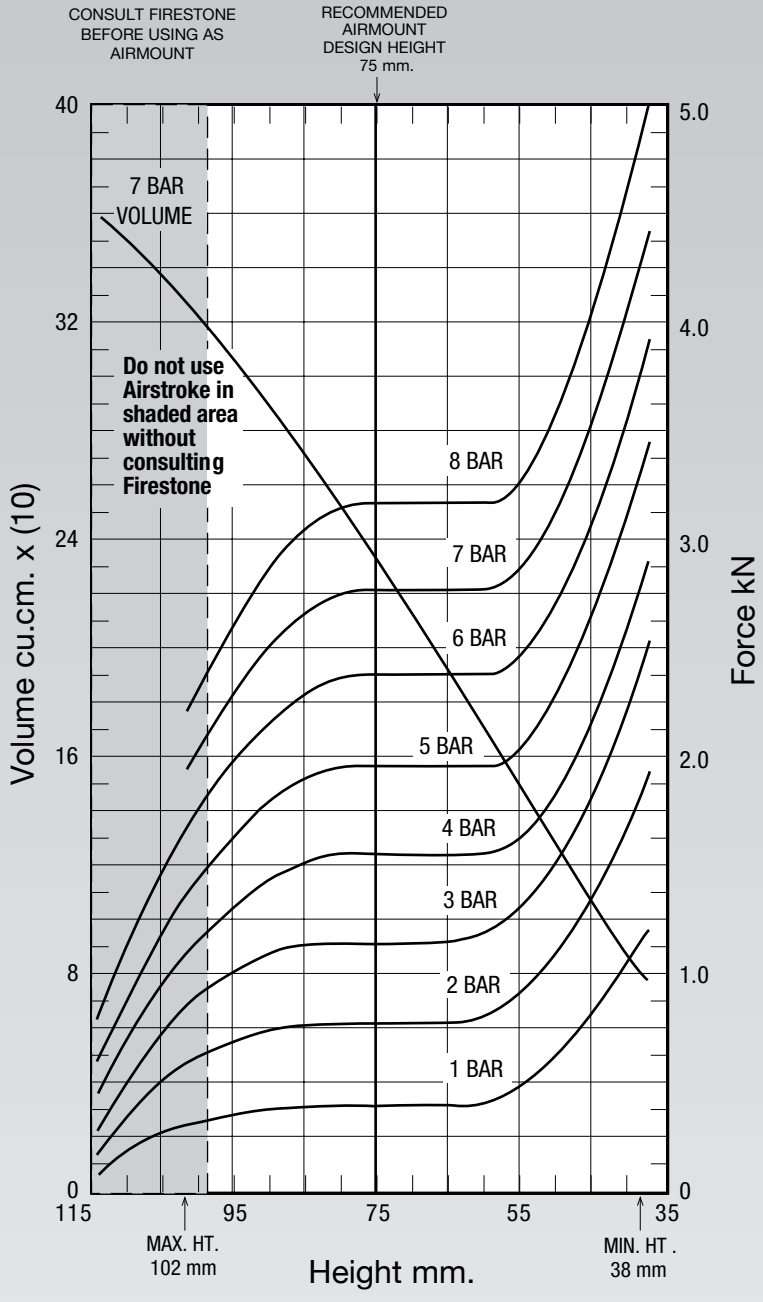

See page 12 for instructions on how to use chart.

Dynamic Characteristics at 75 mm Design Height
(Required for Airmount isolator design only)

Gauge Pressure (BAR)	Load (kN)	Spring Rate (kN/m)	Natural Frequency Hz
3	1.16	38.66	2.88
4	1.57	49.85	2.81
5	1.97	60.30	2.76
6	2.39	71.66	2.73
7	2.78	81.97	2.71

Force Table (Use for Airstroke™ actuator design)

Assembly Height (mm)	Volume @ 7 BAR (cu cm)	EFF Area @ 7 BAR (cm sq)	kN Force @ 3 BAR	@ 4 BAR	@ 5 BAR	@6 BAR	@7 BAR
85	272	38.07	1.14	1.52	1.95	2.30	2.66
75	235	39.67	1.16	1.57	1.97	2.39	2.78
65	194	39.67	1.16	1.57	1.97	2.39	2.78
55	152	40.83	1.31	1.63	2.04	2.46	2.86
45	110	50.25	1.79	2.17	2.63	3.06	3.52

AIRSTROKE ACTUATOR ONLY

	Description	Assembly Order No.
Style 2M1A Two Ply Bellows	1/8 BSP, each end	W02-M58-3002
Assembly weight ..... .27 kg.		
Force to collapse to minimum height (@ 0 BAR).. 133.5 N.		

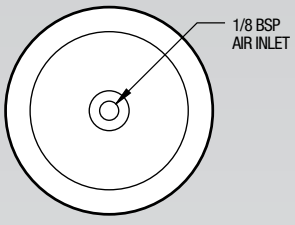

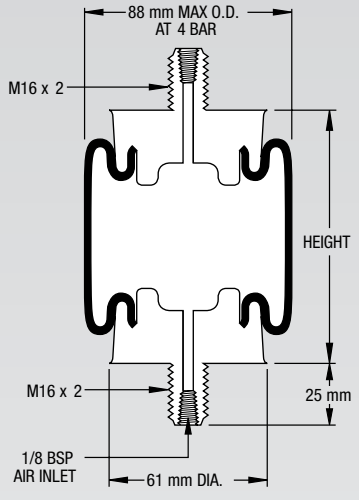

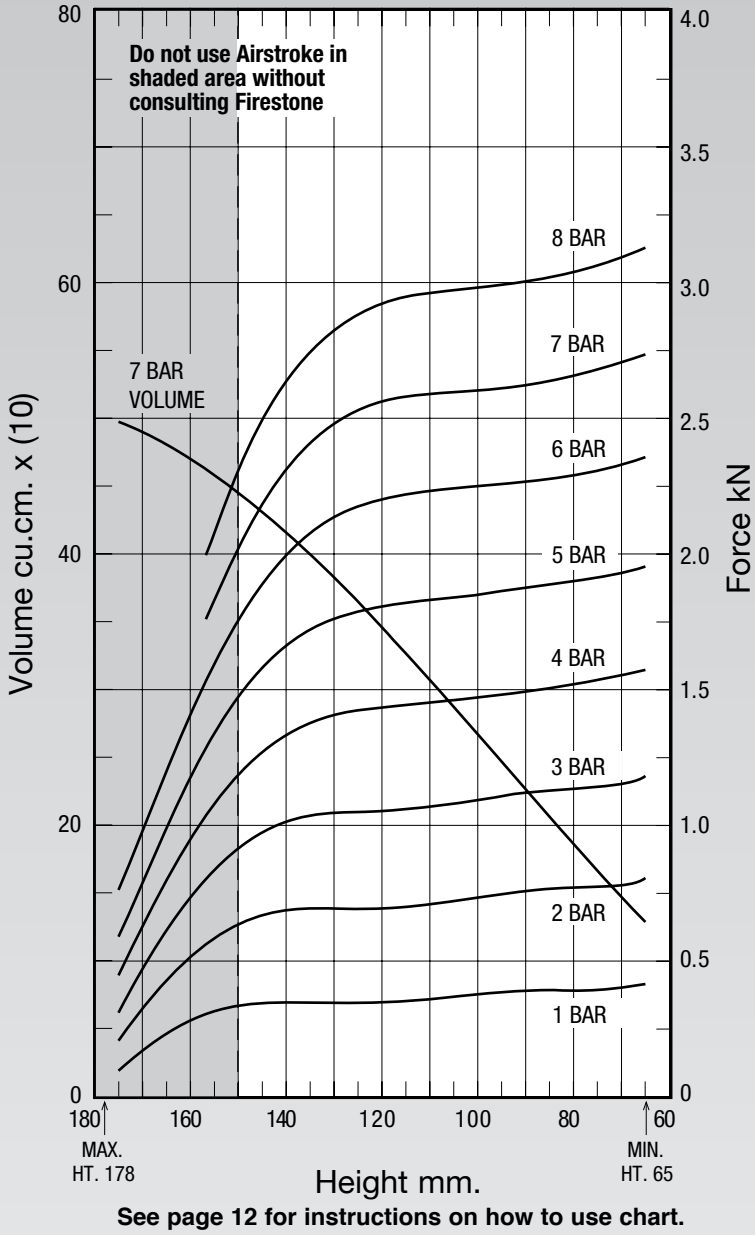

See page 12 for instructions on how to use chart.

NOTE: This Airstroke actuator must be guided throughout the stroke.

NOTE: Do not use as an Airmount isolator.

NOTE: Plug off one end. (This part is single acting)

NOTE:
Do not use as an Airmount isolator

Force Table (Use for Airstroke™ actuator design)

Assembly Height (mm)	Volume @ 7 BAR (cu cm)	EFF Area @ 7 BAR (cm**2)	kN Force @ 3 BAR	@ 4 BAR	@ 5 BAR	@6 BAR	@7 BAR
140	413	33	1.01	1.33	1.65	1.98	2.29
130	379	35	1.04	1.41	1.76	2.13	2.47
120	344	37	1.05	1.44	1.81	2.20	2.56
110	306	37	1.07	1.45	1.83	2.23	2.60
100	268	37	1.09	1.48	1.85	2.25	2.61
90	227	38	1.12	1.50	1.87	2.27	2.63
80	189	38	1.13	1.52	1.90	2.30	2.66
70	150	39	1.15	1.54	1.93	2.33	2.71

	Description	Assembly Order No.
Style 2M2A Two Ply Bellows	Blind Nut, 1/8 BSP, plastic studs	W02-M58-3019
Assembly weight ..... 0.07 kg.		
Force to collapse to minimum height (@ 0 BAR)..... 22 N.		

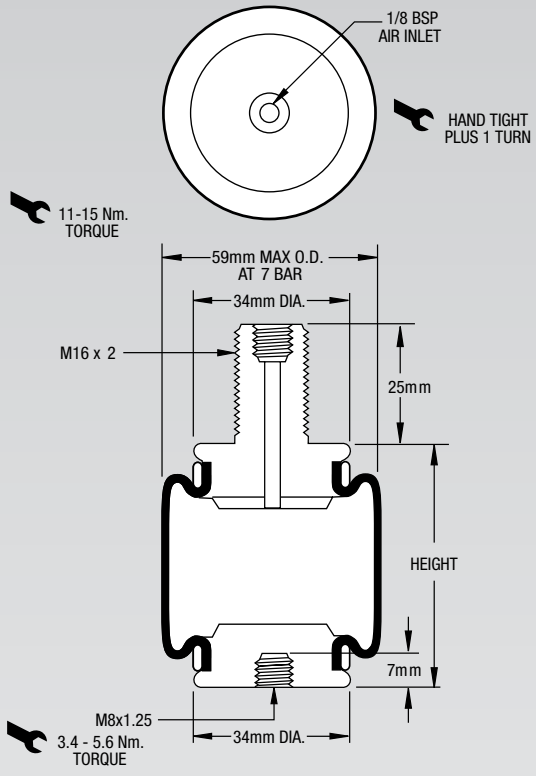

NOTE: This Airstroke actuator must be guided throughout the stroke.

NOTE: The 2M2A must be supported laterally when used as an isolator. Contact Firestone for use in isolation applications.

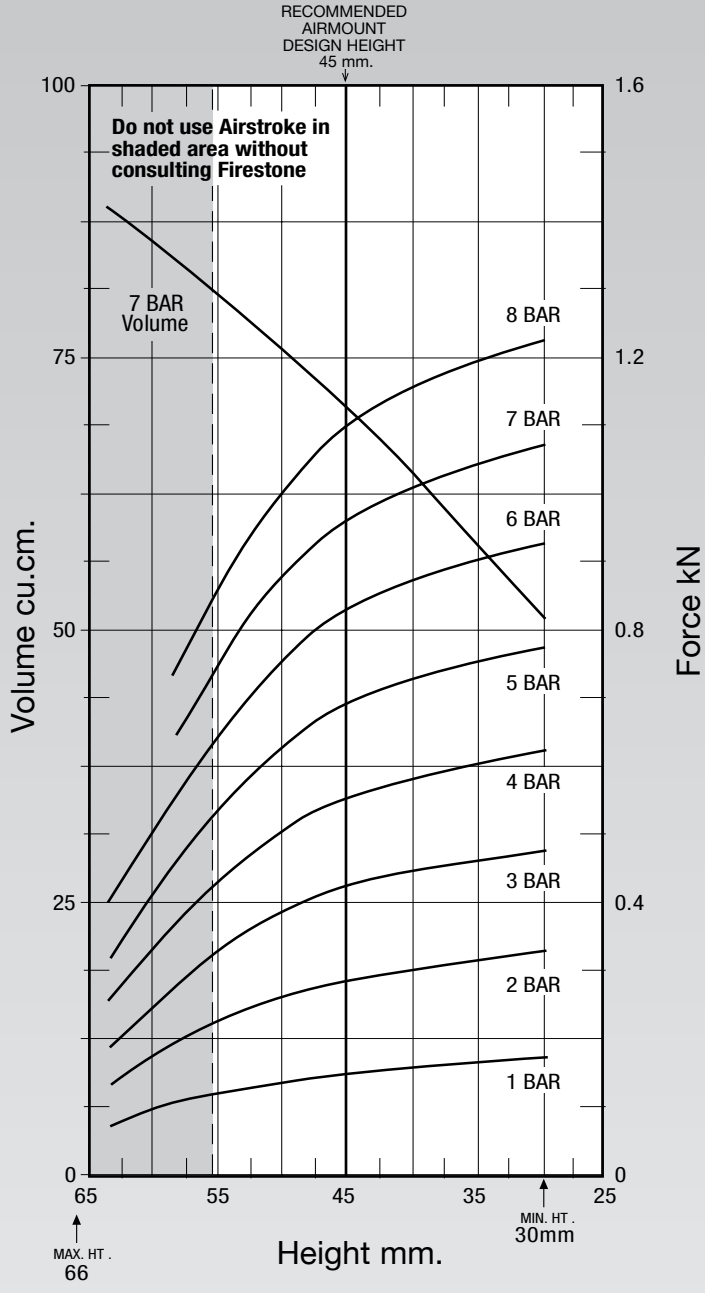

See page 12 for instructions on how to use chart.

Dynamic Characteristics at 45 mm Design Height
(Required for Airmount isolator design only)

Gauge Pressure (BAR)	Load (kN)	Spring Rate (kN/m)	Natural Frequency Hz
3	0.42	18	3.27
4	0.55	23	3.23
5	0.68	29	3.25
6	0.82	34	3.22
7	0.95	39	3.20

Force Table (Use for Airstroke™ actuator design)

Assembly Height (mm)	Volume @ 7 BAR (cu cm)	EFF Area @ 7 BAR (cm**2)	kN Force @ 3 BAR	@ 4 BAR	@ 5 BAR	@6 BAR	@7 BAR
55	80.30	10.4	0.32	0.41	0.52	0.62	0.73
45	70.46	13.6	0.42	0.55	0.68	0.82	0.95
35	58.99	14.8	0.45	0.60	0.75	0.90	1.04
25	40.56	15.6	0.49	0.64	0.79	0.94	1.09

NOTE: All Assembly Order Numbers are for bead plate parts unless noted otherwise.

	Description	Assembly Order No.
Style 16	Blind nuts, 1/4 BSP	W01-M58-6140
Two Ply Bellows	Socket head aluminum bead rings (bolts, nuts, washers not included–use M6 cap screws)	W01-358-0017
	Rubber bellows only	W01-358-0010
Assembly weight.....1.13 kg.		
Force to collapse to minimum height (@ 0 BAR) 133 N.		

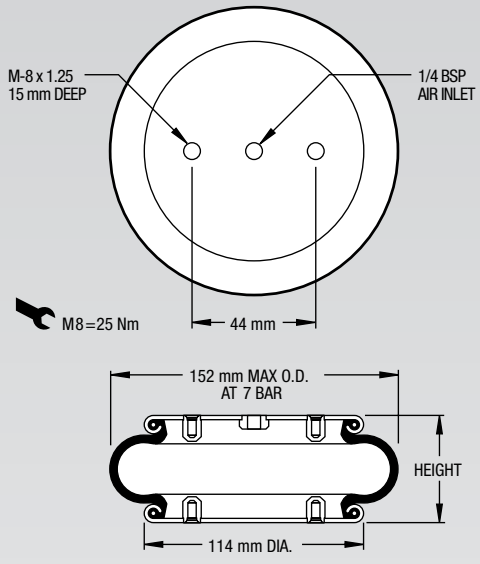

NOTE: A bead plate part is shown. This part is also available with bead rings. Bolts are not included. See pages 8-10 for explanation.

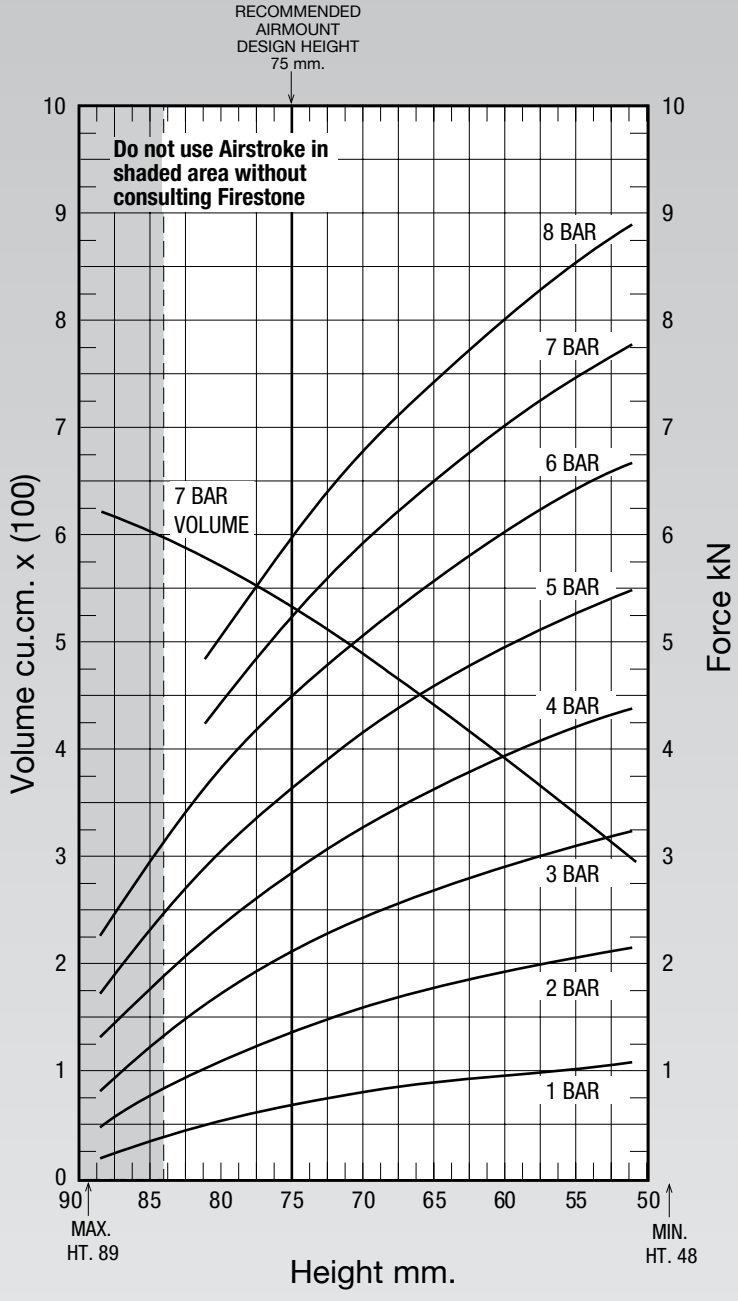

See page 12 for instructions on how to use chart.

Dynamic Characteristics at 75 mm Design Height
(Required for Airmount isolator design only)

Gauge Pressure (BAR)	Load (kN)	Spring Rate (kN/m)	Natural Frequency Hz
3	2.04	140	4.13
4	2.76	177	3.99
5	3.52	217	3.91
6	4.36	256	3.82
7	5.10	293	3.78

Force Table (Use for Airstroke™ actuator design)

Assembly Height (mm)	Volume @ 7 BAR (cu cm)	EFF Area @ 7 BAR (cm**2)	kN Force @ 3 BAR	@ 4 BAR	@ 5 BAR	@6 BAR	@7 BAR
80	575	61	1.61	2.25	2.89	3.62	4.26
70	492	83	2.37	3.20	4.06	4.98	5.81
60	390	99	2.85	3.88	4.89	5.95	6.93

NOTE: All Assembly Order Numbers are for bead plate parts unless noted otherwise.

	Description	Assembly Order No.
Style 131 Two Ply Bellows	Blind nuts, 1/4 BSP	W01-M58-6155
	Socket head aluminum bead rings (bolts, nuts, washers not included–use M6 cap screws)	W01-358-0127
	Rubber bellows only	W01-358-0131
Assembly weight.....1.2 kg.		
Force to collapse to minimum height (@ 0 BAR) 142 N.		

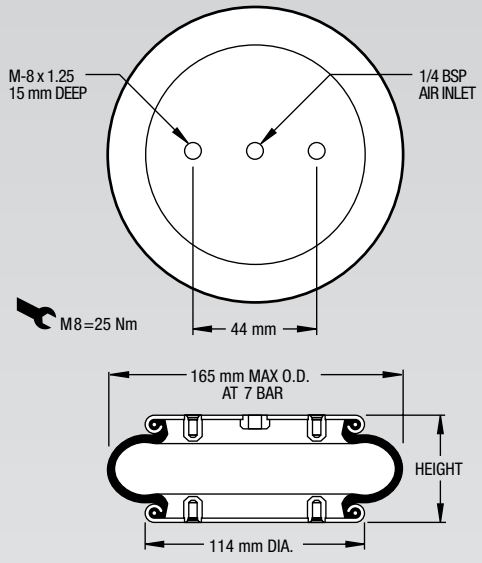

NOTE: A bead plate part is shown. This part is also available with bead rings. Bolts are not included. See pages 8-10 for explanation.

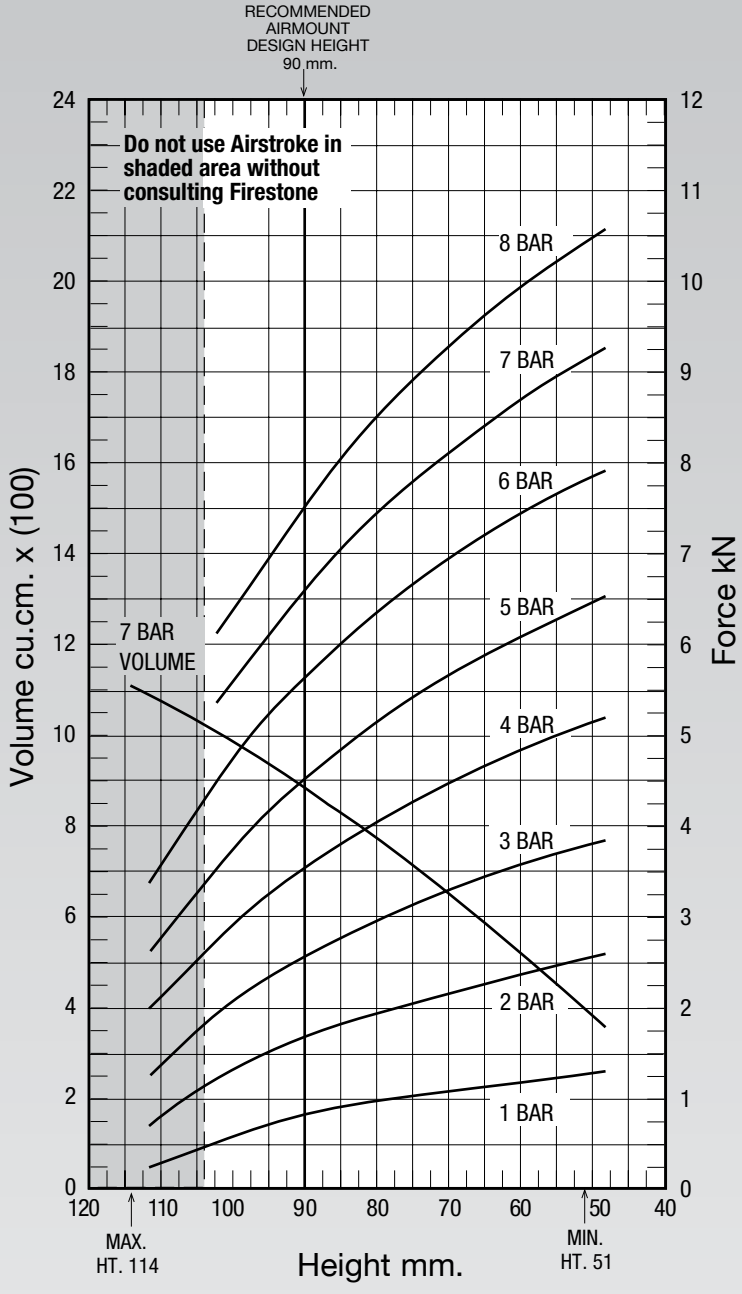

See page 12 for instructions on how to use chart.

Dynamic Characteristics at 90 mm Design Height
(Required for Airmount isolator design only)

Gauge Pressure (BAR)	Load (kN)	Spring Rate (kN/m)	Natural Frequency Hz
3	2.50	103	3.20
4	3.51	133	3.07
5	4.48	162	3.00
6	5.57	193	2.93
7	6.54	221	2.90

Force Table (Use for Airstroke™ actuator design)

Assembly Height (mm)	Volume @ 7 BAR (cu cm)	EFF Area @ 7 BAR (cm**2)	kN Force @ 3 BAR	@ 4 BAR	@ 5 BAR	@6 BAR	@7 BAR
100	982	78	1.96	2.83	3.65	4.63	5.48
90	880	93	2.50	3.51	4.48	5.57	6.54
80	774	105	2.90	4.01	5.10	6.30	7.38
70	652	115	3.23	4.44	5.61	6.91	8.08
60	529	124	3.51	4.79	6.05	7.41	8.65

NOTE: All Assembly Order Numbers are for bead plate parts unless noted otherwise.

	Description	Assembly Order No.
Style 160 Two Ply Bellows	Blind nuts, 1/4 NPT	W01-358-7751
	Socket head aluminum bead rings (bolts, nuts, washers not included–use M6 cap screws)	W01-358-7592
	Blind nuts, 3/4 NPT	W01-358-7752
Assembly weight.....1.36 kg.		
Force to collapse to minimum height (@ 0 BAR) 623 N.		

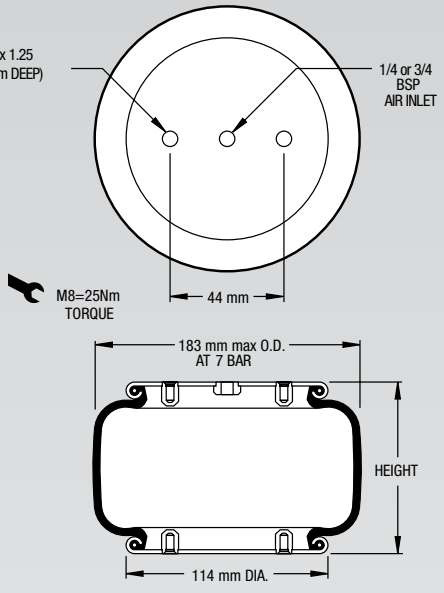

NOTE: A bead plate part is shown. This part is also available with bead rings. Bolts are not included. See pages 8-10 for explanation.

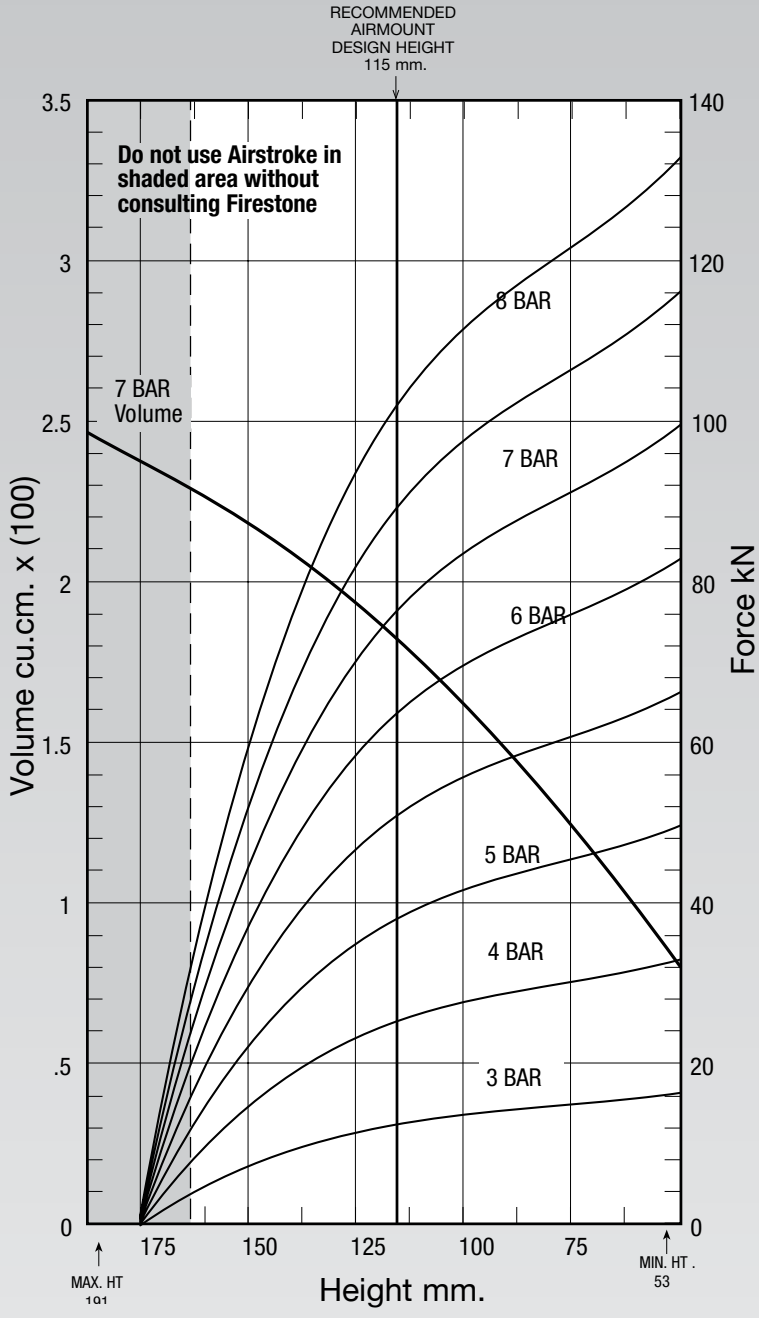

See page 12 for instructions on how to use chart.

Dynamic Characteristics at 115 mm Design Height
(Required for Airmount isolator design only)

Gauge Pressure (BAR)	Load (kN)	Spring Rate (kN/m)	Natural Frequency Hz
4	4.8	57.26	2.22
5	6.0	81.25	2.12
6	7.1	105.25	2.07
7	8.3	129	2.02

Force Table (Use for Airstroke™ actuator design)

Assembly Height (mm)	Volume @ 7 BAR (cu cm)	EFF Area @ 7 BAR (cm**2)	kN Force @ 3 BAR	@ 4 BAR	@ 5 BAR	@6 BAR	@7 BAR
130	2268	80	2.03	2.90	3.75	4.74	5.58
120	2167	103	2.76	3.86	4.95	6.14	7.18
110	2037	123	3.41	4.68	5.96	7.36	8.61
100	1898	140	3.92	5.34	6.78	8.36	9.78
90	1733	154	4.33	5.92	7.49	9.23	10.80
80	1568	166	4.64	6.39	8.08	9.94	11.62
70	1379	176	4.89	6.77	8.58	10.55	12.30
60	1198	184	5.09	7.05	8.97	11.03	12.85

NOTE: All Assembly Order Numbers are for bead plate parts unless noted otherwise.

	Description	Assembly Order No.
Style 110 Two Ply Bellows	Blind nuts, 1/4 BSP	W01-M58-6145
	Socket head aluminum bead rings (bolts, nuts, washers not included–use M6 cap screws)	W01-358-0112
	Rubber bellows only	W01-358-0100
Assembly weight.....1.36 kg.		
Force to collapse to minimum height (@ 0 BAR) 36 N.		

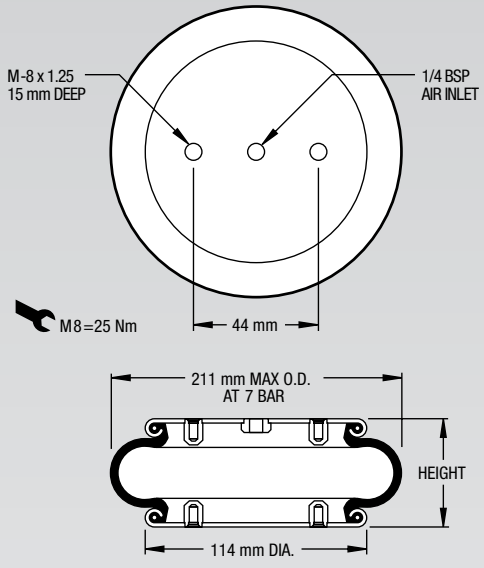

NOTE: A bead plate part is shown. This part is also available with bead rings. Bolts are not included. See pages 8-10 for explanation.

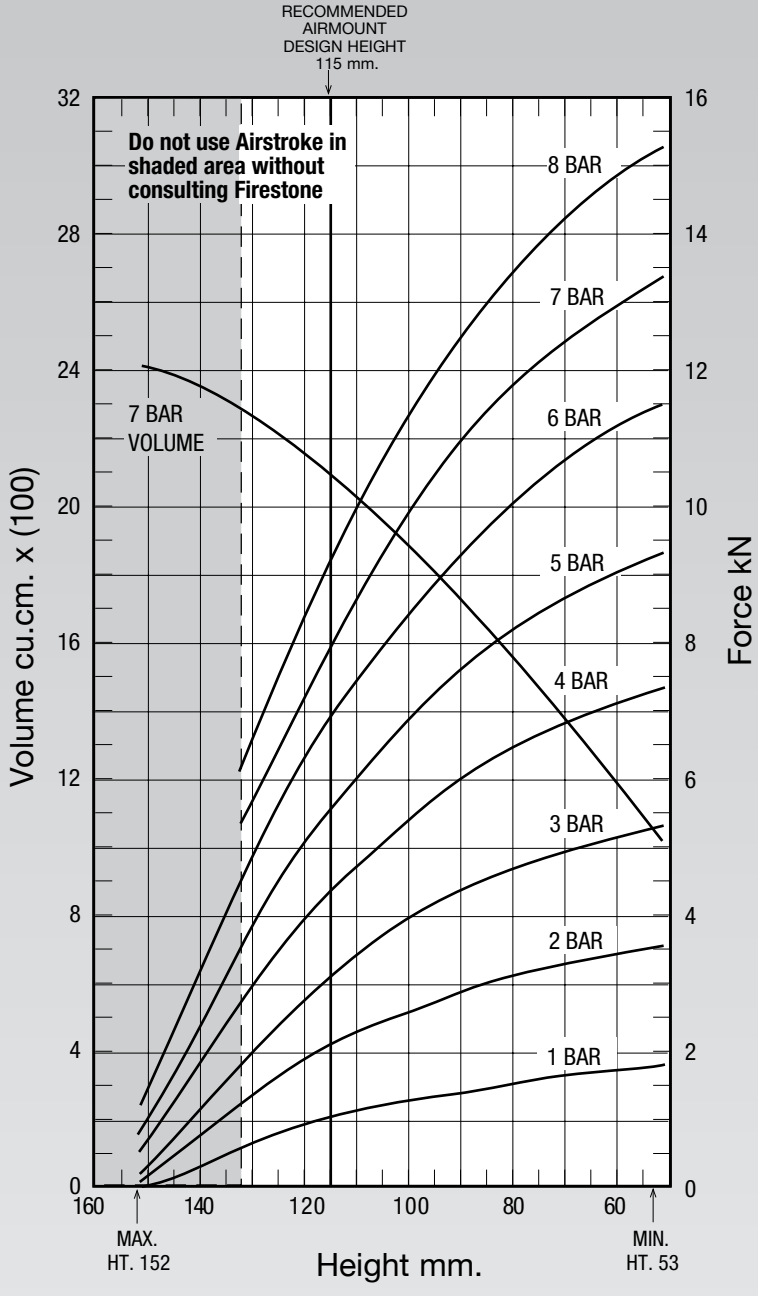

See page 12 for instructions on how to use chart.

Dynamic Characteristics at 115 mm Design Height
(Required for Airmount isolator design only)

Gauge Pressure (BAR)	Load (kN)	Spring Rate (kN/m)	Natural Frequency Hz
3	3.10	99	2.82
4	4.29	127	2.72
5	5.48	157	2.67
6	6.78	189	2.63
7	7.92	218	2.62

Force Table (Use for Airstroke™ actuator design)

Assembly Height (mm)	Volume @ 7 BAR (cu cm)	EFF Area @ 7 BAR (cm**2)	kN Force @ 3 BAR	@ 4 BAR	@ 5 BAR	@6 BAR	@7 BAR
130	2268	80	2.03	2.90	3.75	4.74	5.58
120	2167	103	2.76	3.86	4.95	6.14	7.18
110	2037	123	3.41	4.68	5.96	7.36	8.61
100	1898	140	3.92	5.34	6.78	8.36	9.78
90	1733	154	4.33	5.92	7.49	9.23	10.80
80	1568	166	4.64	6.39	8.08	9.94	11.62
70	1379	176	4.89	6.77	8.58	10.55	12.30
60	1198	184	5.09	7.05	8.97	11.03	12.85

NOTE: All Assembly Order Numbers are for bead plate parts unless noted otherwise.

	Description	Assembly Order No.
Style 116 Two Ply Bellows	Blind nuts, 1/4 BSP	W01-M58-6166
	Blind nuts, 3/4 BSP	W01-M58-6165
	Countersunk steel bead rings, 40 mm bolts, nuts & washers	W01-358-7568
	Rubber bellows only	W01-358-0133
Assembly weight.....1.95 kg.		
Force to collapse to minimum height (@ 0 BAR) 36 N.		

Style 117 High Strength Construction	Blind nuts, 1/4 BSP	W01-M58-6176
	Blind nuts, 3/4 BSP	W01-M58-6175
	Countersunk steel bead rings, 40 mm bolts, nuts & washers	W01-358-7606

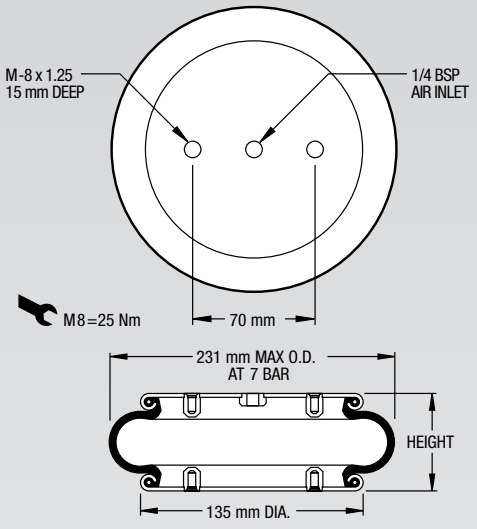

NOTE: A bead plate part is shown. This part is also available with bead rings. See pages 8-10 for explanation.

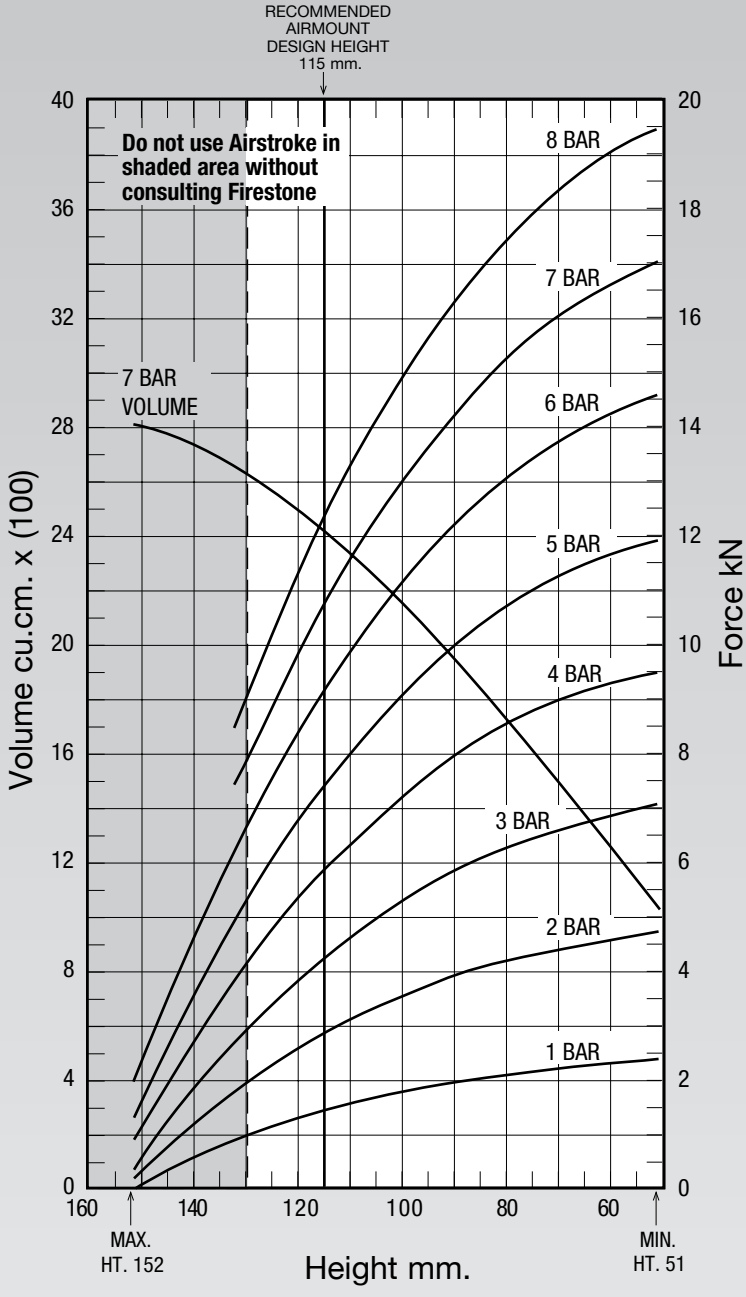

See page 12 for instructions on how to use chart.

Dynamic Characteristics at 115 mm Design Height
(Required for Airmount isolator design only)

Gauge Pressure (BAR)	Load (kN)	Spring Rate (kN/m)	Natural Frequency Hz
3	4.16	132	2.80
4	5.73	169	2.71
5	7.26	207	2.67
6	8.98	247	2.62
7	10.55	285	2.59

Force Table (Use for Airstroke™ actuator design)

Assembly Height (mm)	Volume @ 7 BAR (cu cm)	EFF Area @ 7 BAR (cm**2)	kN Force @ 3 BAR	@ 4 BAR	@ 5 BAR	@6 BAR	@7 BAR
130	2635	110	2.86	4.04	5.17	6.51	7.71
120	2506	138	3.75	5.20	6.60	8.20	9.65
110	2341	163	4.54	6.22	7.86	9.70	11.38
100	2164	183	5.20	7.07	8.92	10.95	12.82
90	1956	201	5.75	7.84	9.84	12.04	14.07
80	1745	215	6.19	8.45	10.59	12.91	15.08
70	1509	228	6.54	8.91	11.18	13.64	15.92
60	1280	236	6.82	9.20	11.58	14.17	16.55

NOTE: All Assembly Order Numbers are for bead plate parts unless noted otherwise.

	Description	Assembly Order No.
Style 116-1 Two Ply Bellows	Blind nuts, 1/4 BSP	W01-M58-6170
Assembly weight.....2.04 kg.		
Force to collapse to minimum height (@ 0 BAR) 165 N.		

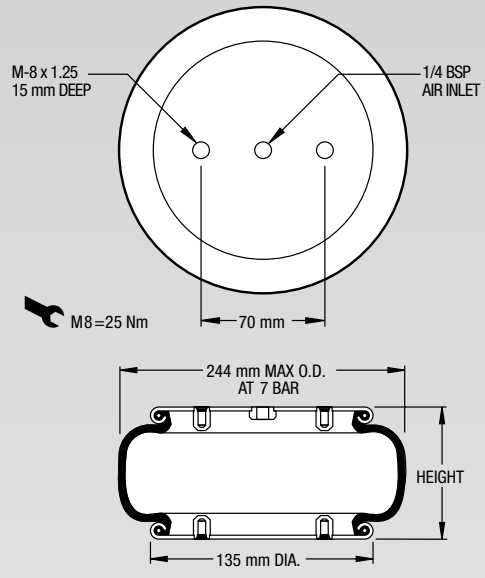

NOTE: A bead plate part is shown. This part is also available with bead rings. See pages 8-10 for explanation.

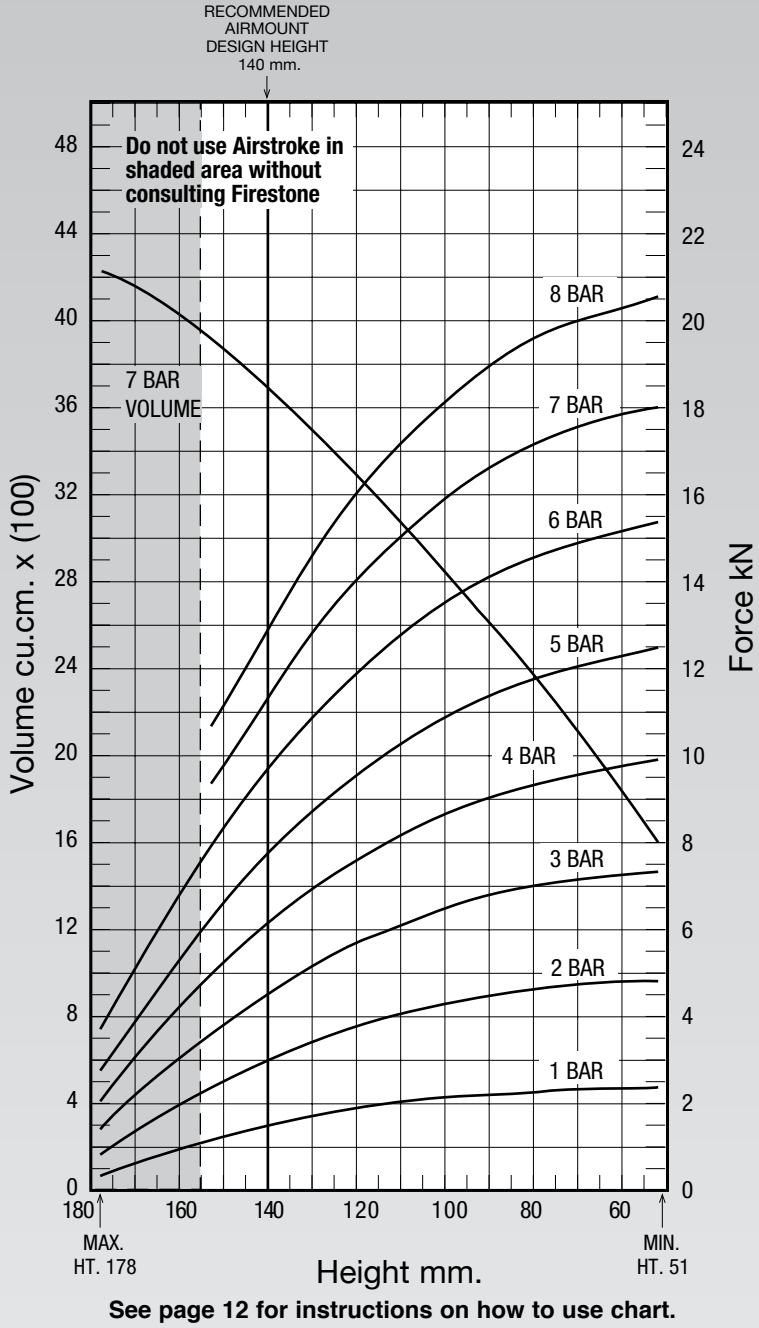

See page 12 for instructions on how to use chart.

Dynamic Characteristics at 140 mm Design Height
(Required for Airmount isolator design only)

Gauge Pressure (BAR)	Load (kN)	Spring Rate (kN/m)	Natural Frequency Hz
3	4.45	108	2.46
4	5.94	138	2.41
5	7.52	170	2.37
6	9.42	205	2.33
7	11.18	237	2.30

Force Table (Use for Airstroke™ actuator design)

Assembly Height (mm)	Volume @ 7 BAR (cu cm)	EFF Area @ 7 BAR (cm**2)	kN Force @ 3 BAR	@ 4 BAR	@ 5 BAR	@6 BAR	@7 BAR
140	3678	160	4.45	5.94	7.52	9.42	11.18
130	3491	180	5.08	6.77	8.55	10.66	12.61
120	3301	197	5.61	7.47	9.42	11.71	13.82
110	3085	213	6.07	8.06	10.18	12.63	14.89
100	2869	225	6.44	8.54	10.79	13.38	15.75
90	2628	236	6.76	8.94	11.31	14.02	16.49
80	2391	244	7.00	9.25	11.72	14.51	17.05
70	2130	250	7.19	9.51	12.05	14.91	17.50

NOTE: All Assembly Order Numbers are for bead plate parts unless noted otherwise.

	Description	Assembly Order No.
Style 115 Two Ply Bellows	Blind nuts, 1/4 BSP	W01-M58-6375
	Blind nuts, 1/4 BSP rubber bumper	W01-M58-6376
	Blind nuts, 3/4 BSP	W01-M58-6374
	Countersunk steel bead rings, 40 mm bolts, nuts, washers	W01-M58-6977
	Rubber bellows only	W01-358-0118
Assembly weight.....2.49 kg.		
Force to collapse to minimum height (@ 0 BAR) 36 N.		

Style 124 High Strength Con-struction	Blind nuts, 1/4 BSP	W01-M58-6181
	Blind nuts, 3/4 BSP	W01-M58-6182

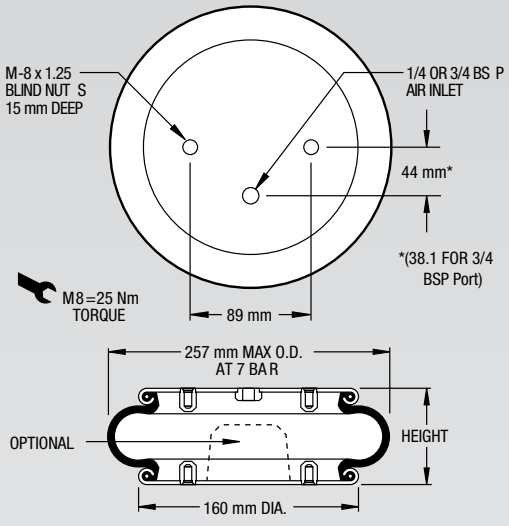

NOTE: A bead plate part is shown. This part is also available with bead rings. See pages 8-10 for explanation.

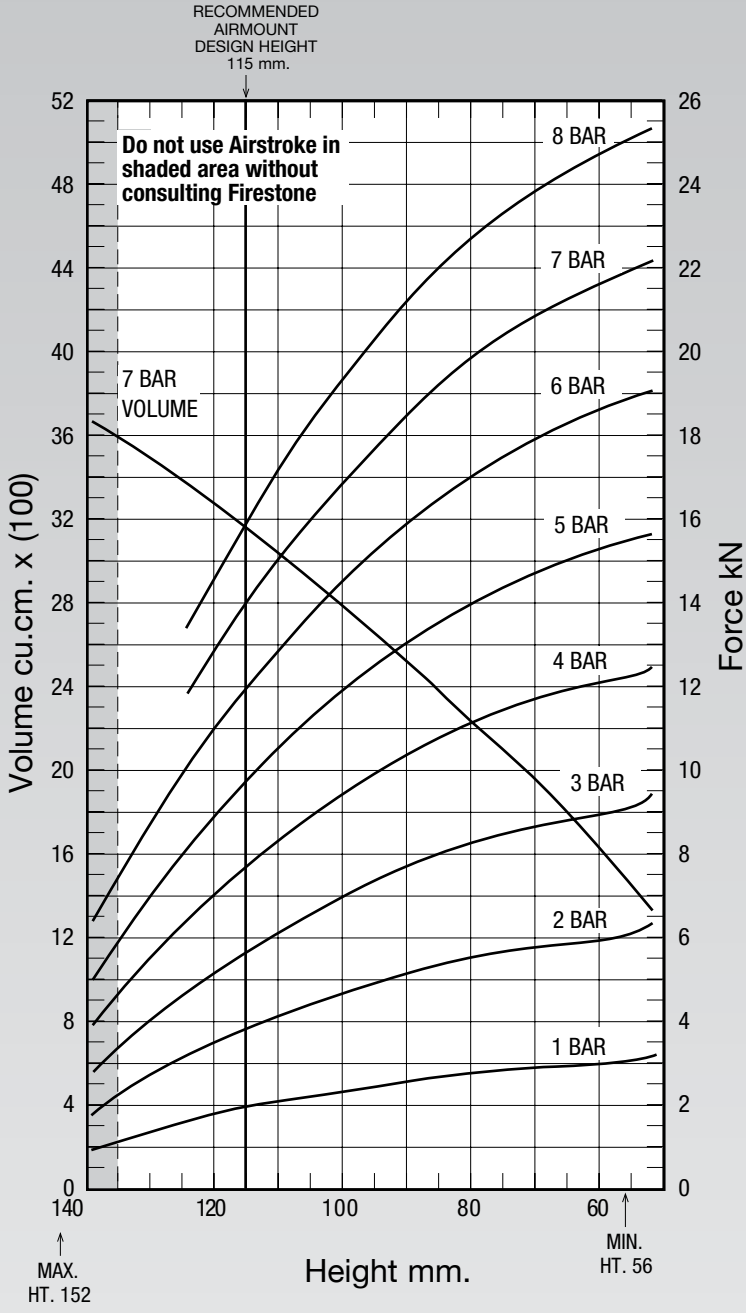

See page 12 for instructions on how to use chart.

Dynamic Characteristics at 115mm Design Height
(Required for Airmount isolator design only)

Gauge Pressure (BAR)	Load (kN)	Spring Rate (kN/m)	Natural Frequency Hz
3	5.64	175	2.78
4	7.63	229	2.73
5	9.62	282	2.70
6	11.81	336	2.66
7	13.81	385	2.63

Force Table (Use for Airstroke™ actuator design)

Assembly Height (mm)	Volume @ 7 BAR (cu cm)	EFF Area @ 7 BAR (cm sq)	kN Force @ 3 BAR	@ 4 BAR	@ 5 BAR	@6 BAR	@7 BAR
130	3467	144	3.95	5.37	6.81	8.51	10.05
120	3265	180	5.13	6.93	8.75	10.78	12.63
110	3030	213	6.11	8.25	10.40	12.74	14.88
100	2794	239	6.92	9.33	11.74	14.34	16.73
90	2525	263	7.66	10.30	12.93	15.75	18.37
80	2256	282	8.24	11.08	13.89	16.91	19.70
70	1951	297	8.62	11.65	14.64	17.82	20.76
60	1650	307	8.88	12.01	15.14	18.46	21.49

NOTE: All Assembly Order Numbers are for bead plate parts unless noted otherwise.

	Description	Assembly Order No.
Style 19	Blind nuts, 1/4 BSP	W01-M58-6008
	Blind nuts, 1/4 BSP, bumper	W01-M58-6373
Two Ply Bellows	Blind nuts, 3/4 BSP	W01-M58-6011
	Blind nuts, 3/4 BSP, bumper	W01-M58-6372
	Countersunk steel bead rings, 40 mm bolts, nuts, washers	W01-M58-6975
	Rubber bellows only	W01-358-0134
Assembly weight (bead plate version, no bumper)		4.45 kg.
Force to collapse to minimum height (@ 0 BAR)		40 N.

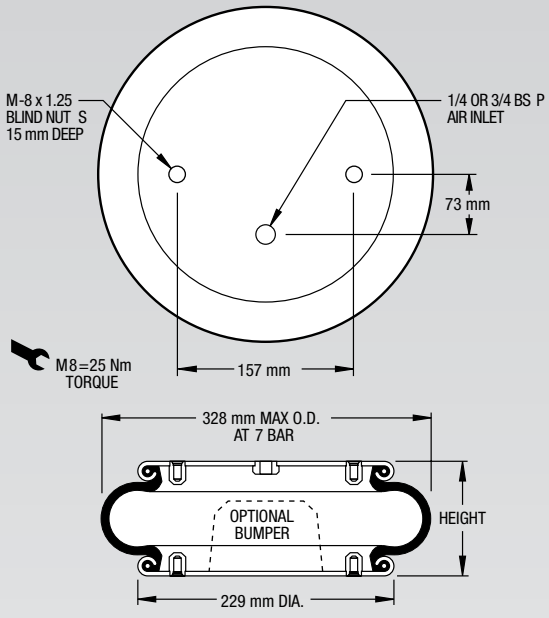

NOTE: A bead plate part is shown. This part is also available with bead rings. See pages 8-10 for explanation.

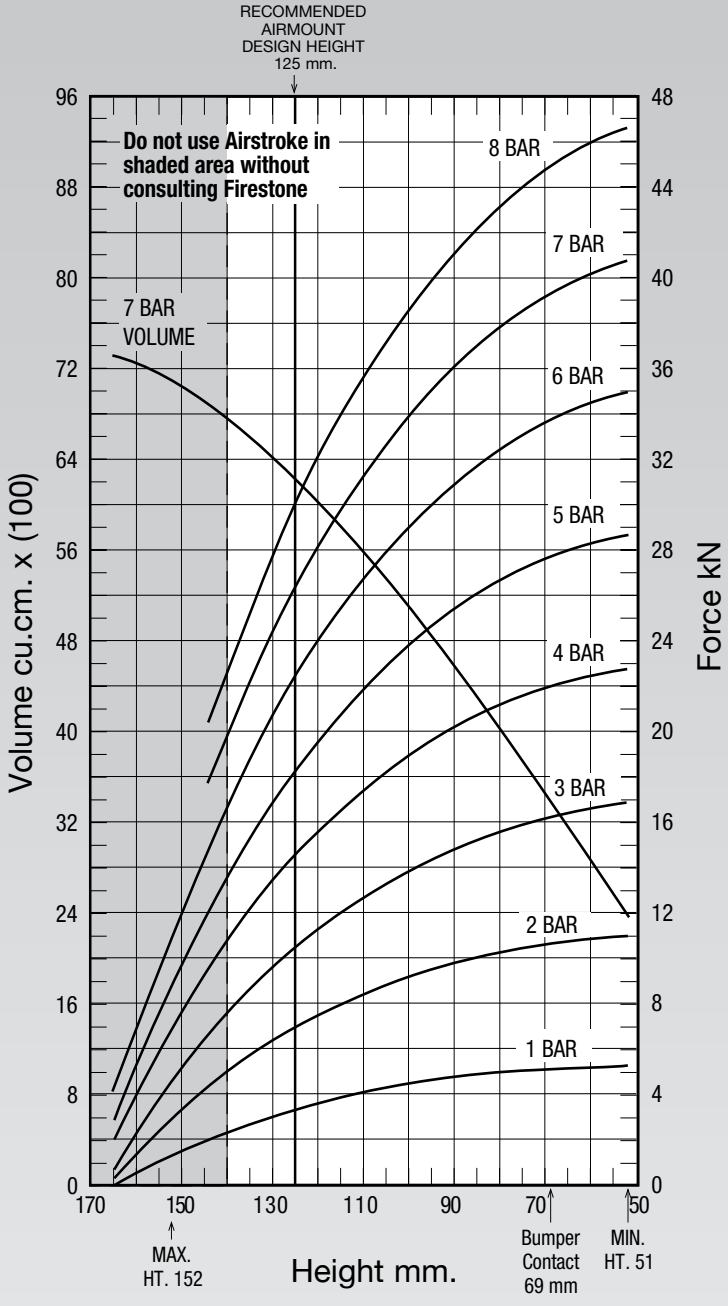

See page 12 for instructions on how to use chart.

Dynamic Characteristics at 125 mm Design Height
(Required for Airmount isolator design only)

Gauge Pressure (BAR)	Load (kN)	Spring Rate (kN/m)	Natural Frequency Hz
3	10.49	290	2.62
4	14.46	383	2.57
5	18.21	471	2.54
6	22.34	559	2.49
7	26.15	641	2.47

Force Table (Use for Airstroke™ actuator design)

Assembly Height (mm)	Volume @ 7 BAR (cu cm)	EFF Area @ 7 BAR (cm sq)	kN Force @ 3 BAR	@ 4 BAR	@ 5 BAR	@6 BAR	@7 BAR
130	6379	345	9.61	13.28	16.74	20.60	24.15
120	6004	398	11.24	15.49	19.48	23.85	27.87
110	5555	444	12.67	17.39	21.84	26.65	31.10
100	5093	482	13.85	18.90	23.74	28.92	33.71
90	4566	513	14.87	20.18	25.35	30.86	35.94
80	4048	539	15.67	21.16	26.59	32.38	37.69
70	3474	559	16.27	21.93	27.58	33.60	39.13
60	2923	574	16.68	22.48	28.26	34.45	40.15

NOTE: All Assembly Order Numbers are for bead plate parts unless noted otherwise.

	Description	Assembly Order No.
Style 19-.75 Two Ply Bellows	Blind nuts, 1/4 BSP	W01-M58-6040
Assembly weight (bead plate version, no bumper)		4.53 kg.
Force to collapse to minimum height (@ 0 BAR)		67 N.

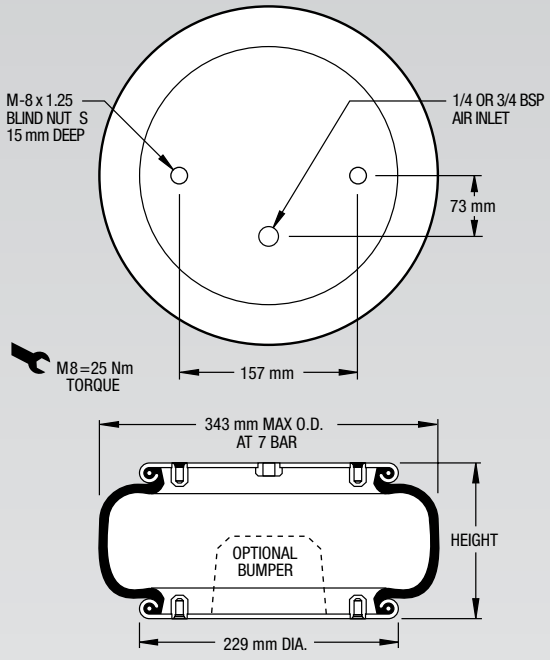

NOTE: A bead plate part is shown. This part is also available with bead rings. See pages 8-10 for explanation.

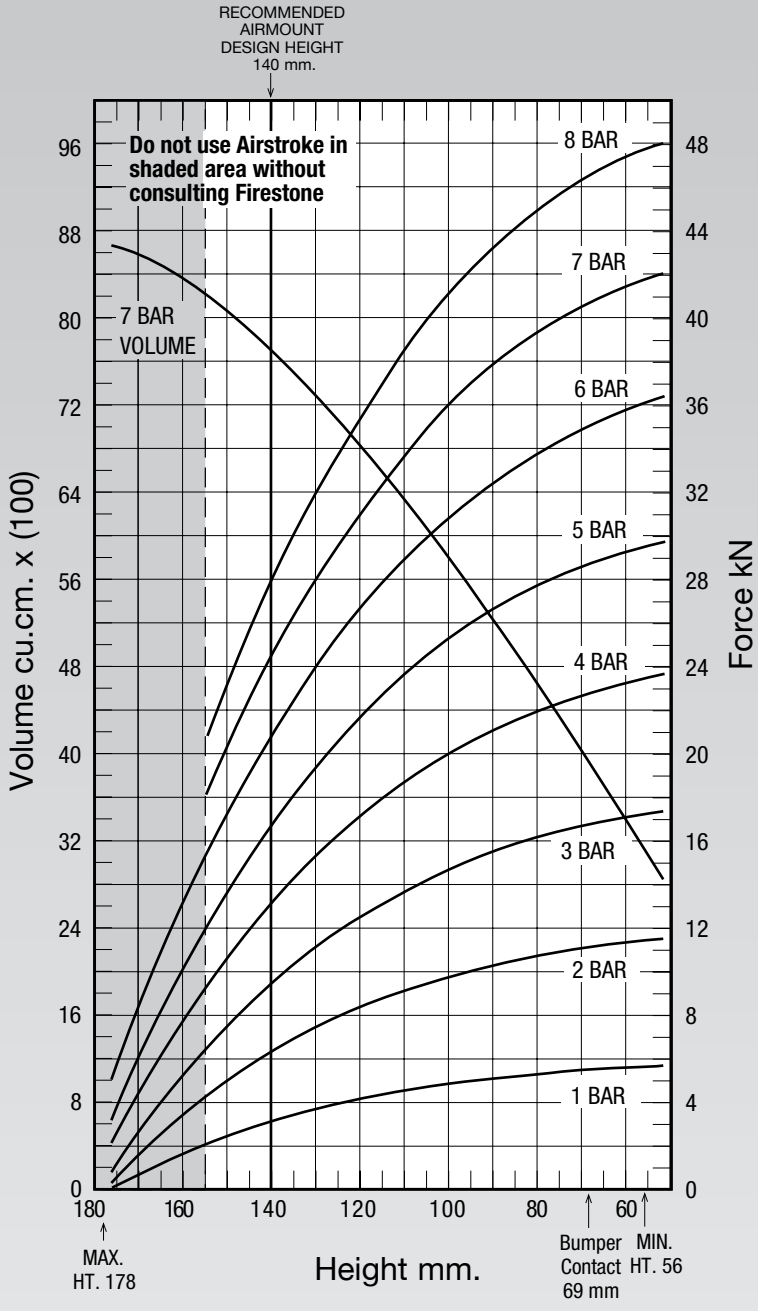

See page 12 for instructions on how to use chart.

Dynamic Characteristics at 140 mm Design Height
(Required for Airmount isolator design only)

Gauge Pressure (BAR)	Load (kN)	Spring Rate (kN/m)	Natural Frequency Hz
3	9.30	272	2.70
4	12.89	356	2.62
5	16.44	435	2.57
6	20.49	514	2.50
7	24.11	589	2.46

Force Table (Use for Airstroke™ actuator design)

Assembly Height (mm)	Volume @ 7 BAR (cu cm)	EFF Area @ 7 BAR (cm sq)	kN Force @ 3 BAR	@ 4 BAR	@ 5 BAR	@6 BAR	@7 BAR
140	7705	345	9.30	12.89	16.44	20.49	24.11
130	7286	397	11.01	15.15	19.21	23.73	27.81
120	6846	441	12.41	17.00	21.52	26.44	30.89
110	6335	480	13.64	18.63	23.55	28.84	33.62
100	5822	512	14.65	19.94	25.19	30.79	35.86
90	5243	540	15.50	21.06	26.57	32.45	37.80
80	4681	562	16.18	21.93	27.65	33.77	39.34
70	4063	580	16.73	22.65	28.54	34.84	40.60

NOTE: All Assembly Order Numbers are for bead plate parts unless noted otherwise.

	Description	Assembly Order No.
Style 113 Two Ply Bellows	Blind nuts, 1/4 BSP	W01-M58-6101
	Blind nuts, 1/4 BSP, bumper	W01-M58-6103
	Blind nuts, 3/4 BSP	W01-M58-6100
	Blind nuts, 3/4 BSP, bumper	W01-M58-6102
	Countersunk steel bead rings, 40 mm bolts, nuts washers	W01-M58-7538
	Rubber bellows only	W01-358-0135
Assembly weight.....6.58 kg.		
Force to collapse to minimum height (@ 0 BAR) 76 N.		

Style 128 High Strength Construction	Blind nuts, 1/4 BSP	W01-M58-6071
	Blind nuts, 3/4 BSP	W01-M58-6070
	Rubber bellows only	W01-358-0231

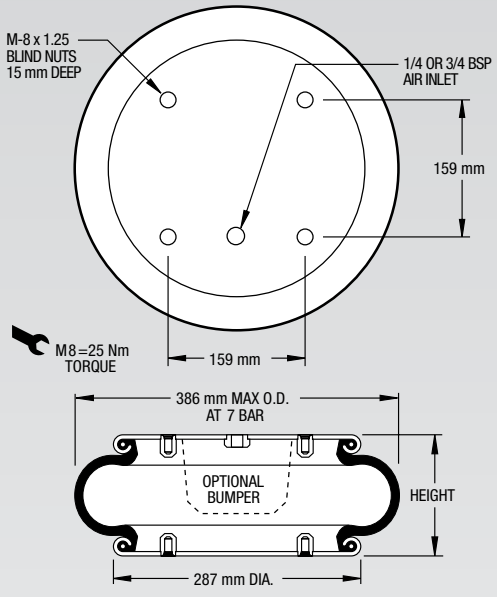

NOTE: A bead plate part is shown. This part is also available with bead rings. See pages 8-10 for explanation.

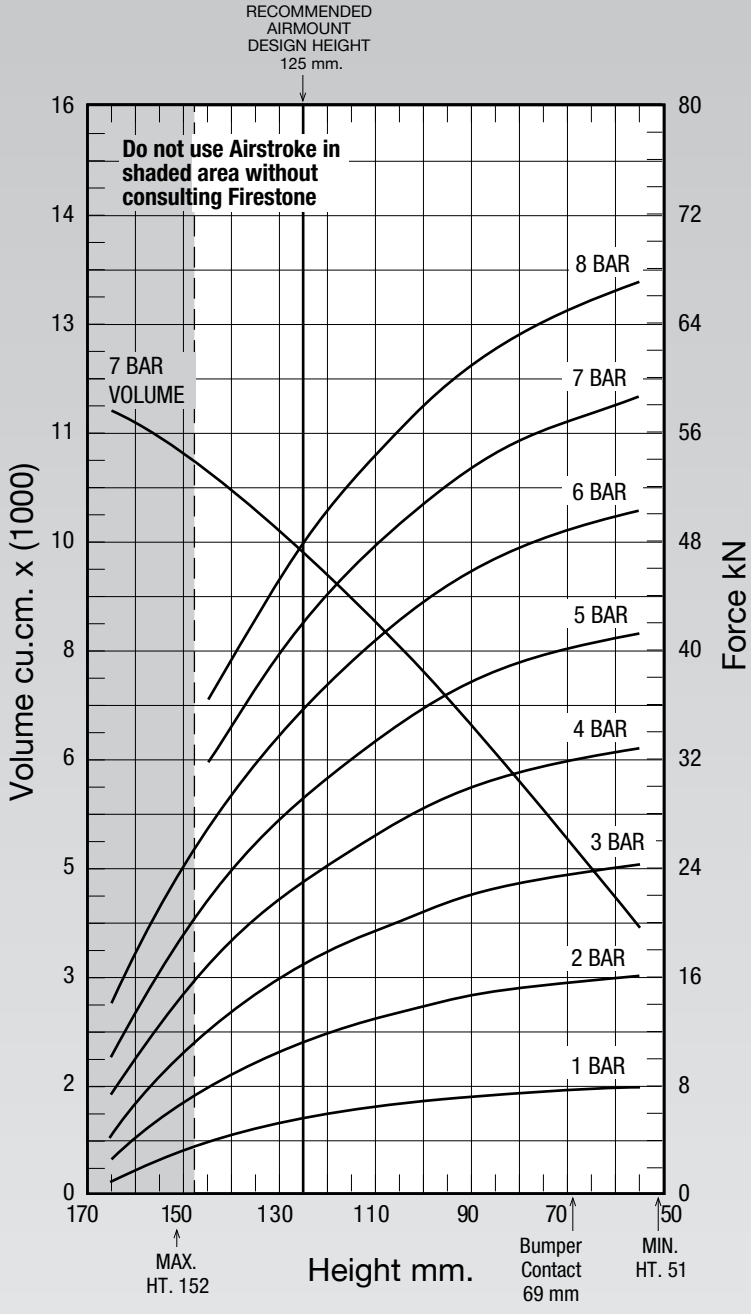

See page 12 for instructions on how to use chart.

Dynamic Characteristics at 125 mm Design Height
(Required for Airmount isolator design only)

Gauge Pressure (BAR)	Load (kN)	Spring Rate (kN/m)	Natural Frequency Hz
3	16.72	416	2.49
4	22.90	534	2.41
5	28.97	651	2.36
6	35.62	774	2.32
7	41.65	890	2.31

Force Table (Use for Airstroke™ actuator design)

Assembly Height (mm)	Volume @ 7 BAR (cu cm)	EFF Area @ 7 BAR (cm sq.)	kN Force @ 3 BAR	@ 4 BAR	@ 5 BAR	@6 BAR	@7 BAR
140	10316	486	13.02	18.16	23.20	28.93	34.00
130	9720	562	15.62	21.49	27.24	33.59	39.30
120	9110	624	17.66	24.10	30.44	37.37	43.68
110	8411	679	19.40	26.36	33.22	40.69	47.53
100	7714	724	20.81	28.23	35.53	43.42	50.66
90	6929	762	22.00	29.85	37.54	45.76	53.31
80	6159	790	22.89	31.08	39.05	47.53	55.33
70	5306	813	23.54	31.96	40.13	48.87	56.93

NOTE: All Assembly Order Numbers are for bead plate parts unless noted otherwise.

	Description	Assembly Order No.
Style 113-1 Two Ply Bellows	Blind nuts, 1/4 BSP	W01-M58-6371
	Blind nuts, 3/4 BSP	W01-M58-6369
	Rubber bellows only	W01-358-0150
Assembly weight.....6.89 kg.		
Force to collapse to minimum height (@ 0 BAR) 111 N.		
Style 128-1 High Strength Con-struction	Blind nuts, 3/4 BSP	W01-M58-6066

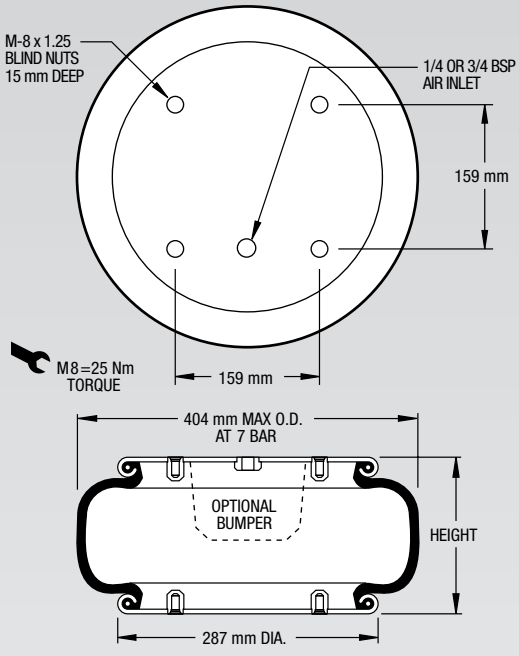

NOTE: A bead plate part is shown. This part is also available with bead rings. See pages 8-10 for explanation.

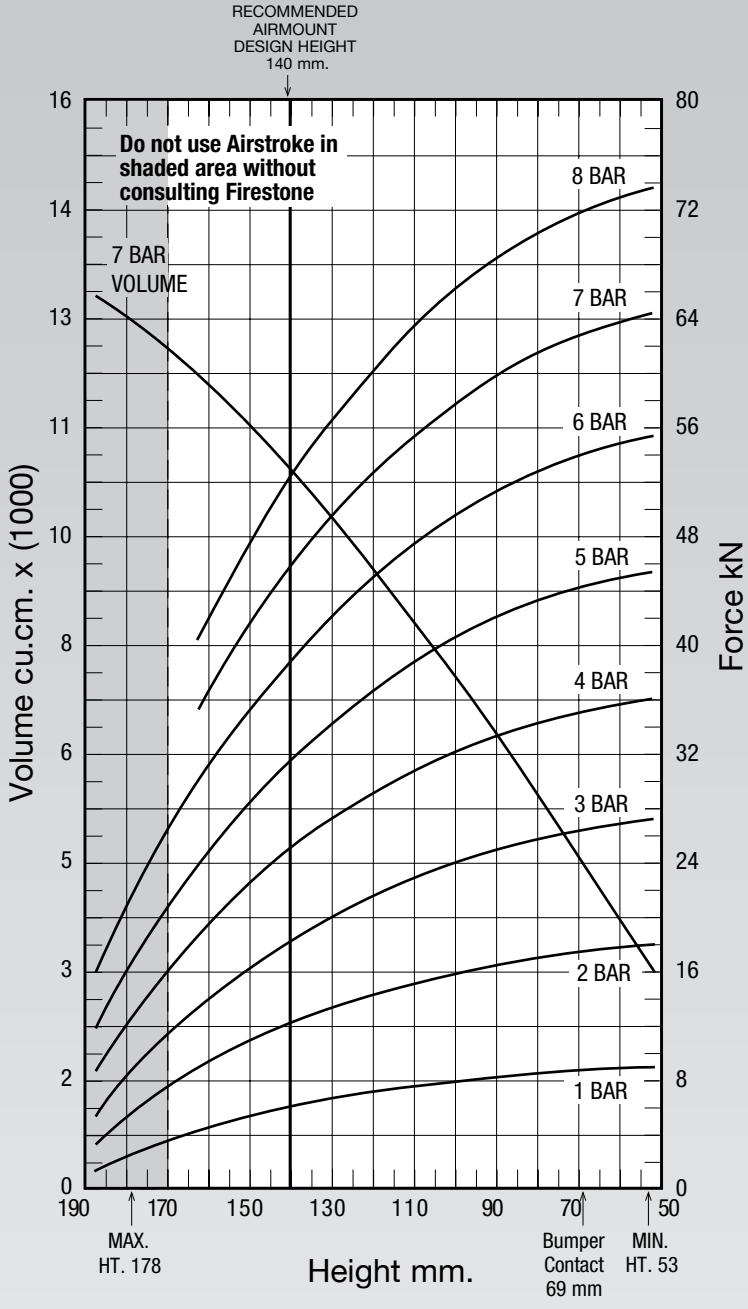

See page 12 for instructions on how to use chart.

Dynamic Characteristics at 140mm Design Height
(Required for Airmount isolator design only)

Gauge Pressure (BAR)	Load (kN)	Spring Rate (kN/m)	Natural Frequency Hz
3	18.07	416	2.39
4	24.76	529	2.31
5	31.33	646	2.27
6	38.72	771	2.23
7	45.44	887	2.20

Force Table (Use for Airstroke™ actuator design)

Assembly Height (mm)	Volume @ 7 BAR (cu cm)	EFF Area @ 7 BAR (cm sq.)	kN Force @ 3 BAR	@ 4 BAR	@ 5 BAR	@6 BAR	@7 BAR
160	11771	516	13.58	19.08	24.39	30.59	36.10
140	10492	649	18.07	24.76	31.33	38.72	45.44
120	9061	750	21.39	28.92	36.48	44.84	52.49
100	7479	825	23.91	32.03	40.34	49.41	57.72
80	5781	878	25.75	34.28	43.15	52.69	61.43
60	4002	911	26.85	35.69	44.94	54.78	63.79

NOTE: All Assembly Order Numbers are for bead plate parts unless noted otherwise.

	Description	Assembly Order No.
Style 153-2 Two Ply Bellows	Blind nuts, 1/4 NPT	W01-358-8158
Assembly weight.....7.86 kg		

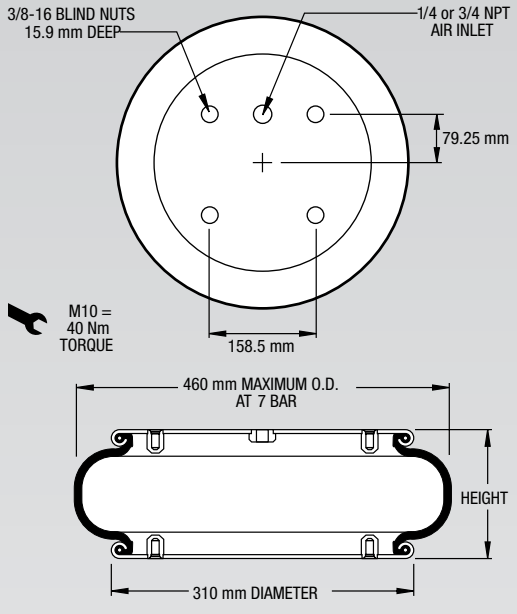

NOTE: A bead plate part is shown. This part is also available with bead rings. See pages 8-10 for explanation.

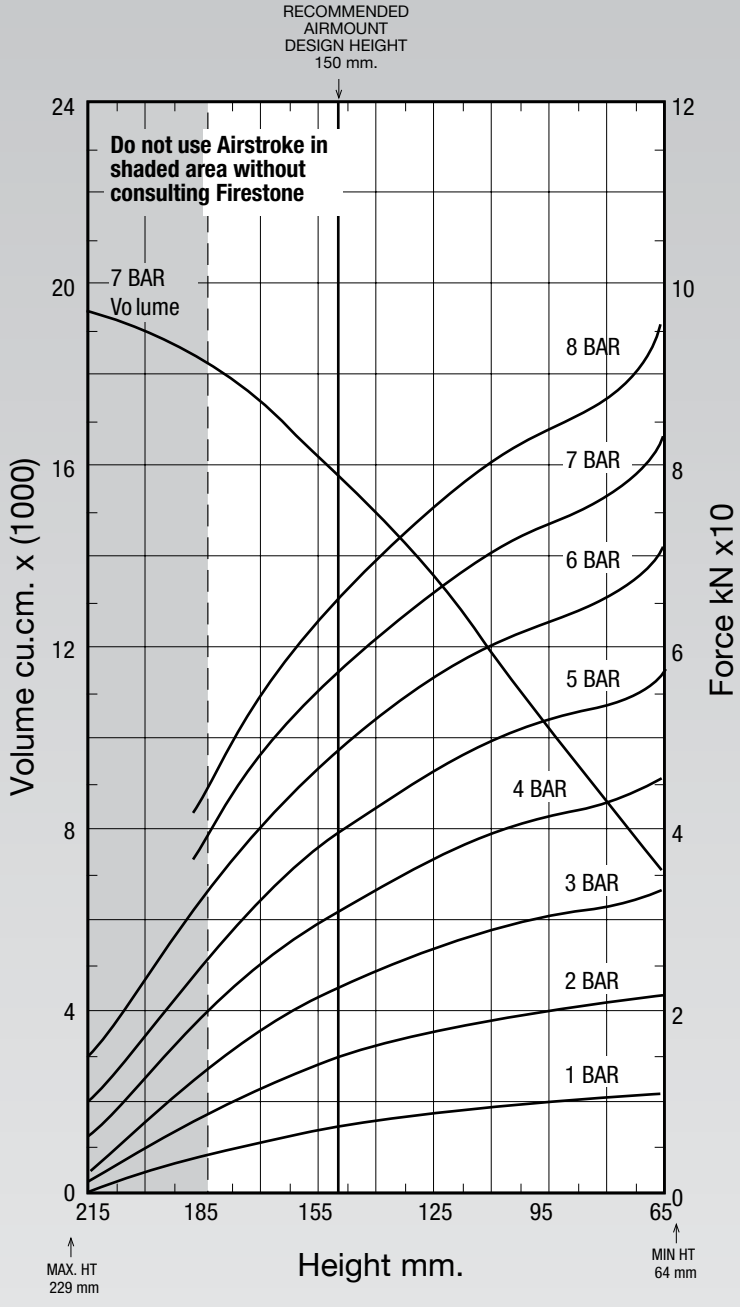

See page 12 for instructions on how to use chart.

Dynamic Characteristics at 150 mm Design Height
(Required for Airmount isolator design only)

Gauge Pressure (BAR)	Load (kN)	Spring Rate (kN/m)	Natural Frequency Hz
3	22.39	428.74	2.18
4	30.72	555.60	2.12
5	39.04	673.69	2.07
6	48.29	794.88	2.02
7	56.58	911.22	2.00

Force Table (Use for Airstroke™ actuator design)

Assembly Height (mm)	Volume @ 7 BAR (cu cm)	EFF Area @ 7 BAR (cm sq)	kN Force				
			@ 3 BAR	@ 4 BAR	@ 5 BAR	@6 BAR	@7 BAR
180	18085	586	14.48	21.09	27.34	34.71	41.03
165	17075	710	19.02	26.49	33.92	42.34	49.74
150	15865	808	22.39	30.72	39.04	48.29	56.58
135	14493	890	25.09	34.38	43.44	53.33	62.31
120	13057	960	27.37	37.61	47.34	57.70	67.20
105	11469	1016	29.32	40.21	50.50	61.28	71.18
90	9891	1054	30.76	41.86	52.56	63.81	74.18
75	8291	1112	32.00	43.34	54.47	66.62	77.85

NOTE: All Assembly Order Numbers are for bead ring parts unless noted otherwise.

	Description	Assembly Order No.
Style 119	Ribbed neck aluminum bead rings (equal spacing), 45 mm bolts, nuts, washers	W01-M58-6974
Two Ply Bellows	Rubber bellows only	W01-358-0119
	Rolled plate assembly, 1/2 blind nuts, 3/4 NPT	W01-358-7477
Assembly weight.....5.98 kg.		
Force to collapse to minimum height (@ 0 BAR) 76 N.		

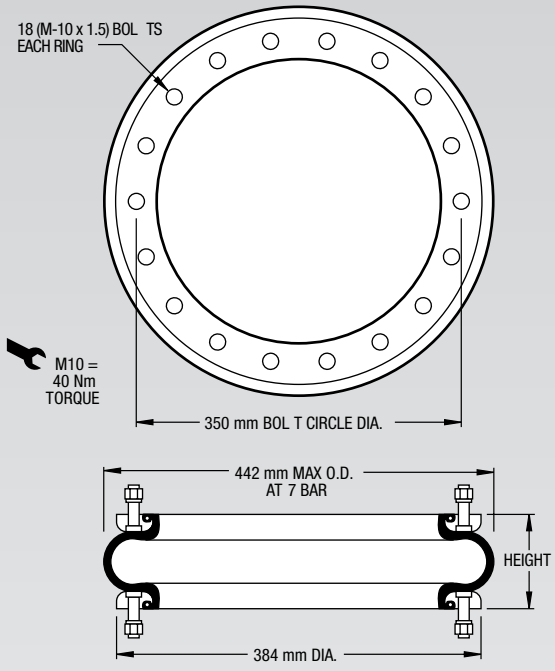

NOTE: A bead ring part is shown. This part is also available with rolled plates. See page 11 for explanation.

**Increase the minimum height by 18 mm. Add 18 mm to the height (bottom axis) before reading loads.*

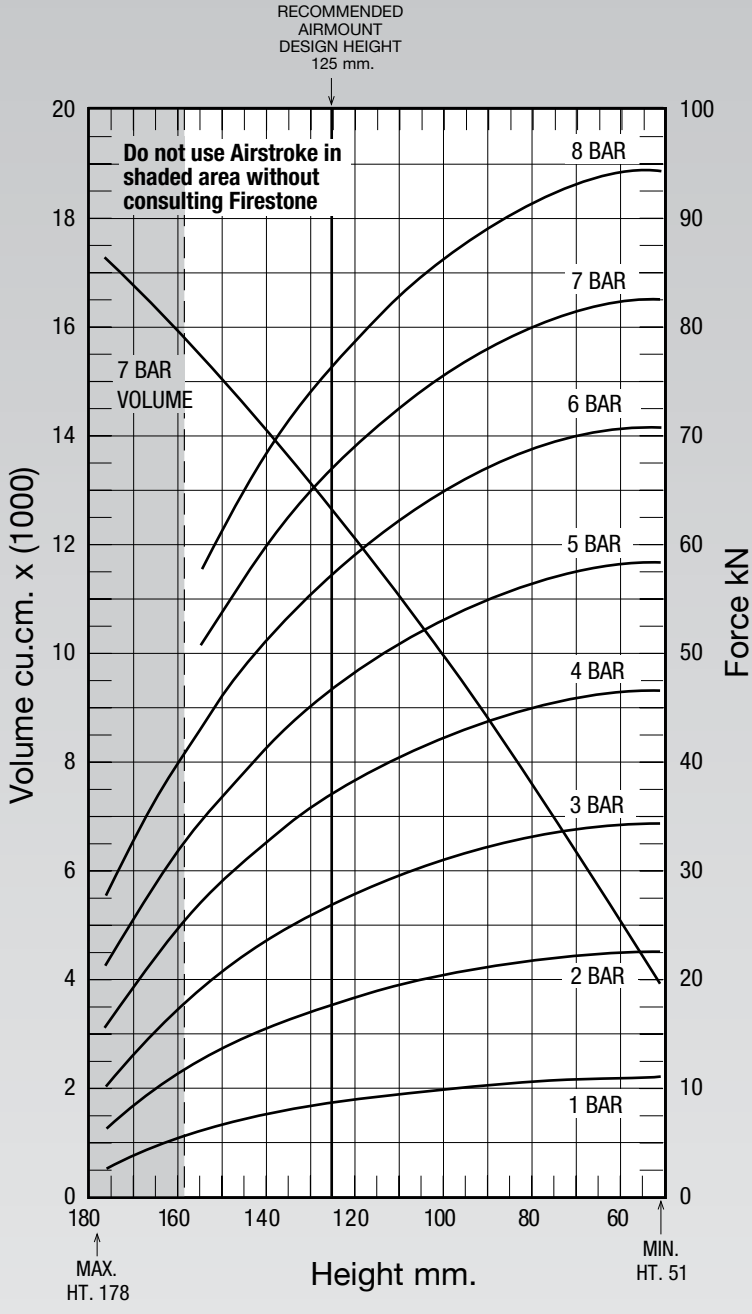

See page 12 for instructions on how to use chart.

Dynamic Characteristics at 125 mm Design Height
(Required for Airmount isolator design only)

Gauge Pressure (BAR)	Load (kN)	Spring Rate (kN/m)	Natural Frequency Hz
3	26.86	599	2.35
4	36.82	766	2.27
5	46.53	934	2.23
6	57.15	1109	2.20
7	66.80	1269	2.17

Force Table (Use for Airstroke™ actuator design)

Assembly Height (mm)	Volume @ 7 BAR (cu cm)	EFF Area @ 7 BAR (cm sq)	kN Force @ 3 BAR	@ 4 BAR	@ 5 BAR	@6 BAR	@7 BAR
140	14081	847	23.26	32.31	40.96	50.59	59.29
130	13097	922	25.78	35.46	44.84	55.17	64.52
120	12133	982	27.78	37.99	47.98	58.85	68.74
110	11058	1033	29.48	40.18	50.67	62.00	72.34
100	10008	1075	30.83	41.97	52.85	64.53	75.23
90	8840	1110	31.99	43.53	54.73	66.70	77.72
80	7704	1139	32.96	44.81	56.25	68.45	79.72
70	6445	1162	33.79	45.85	57.48	69.86	81.34

NOTE: All Assembly Order Numbers are for bead ring parts unless noted otherwise.

	Description	Assembly Order No.
Style 121 Two Ply Bellows	Ribbed neck aluminum bead rings, 45 mm bolts, nuts, washers	W01-M58-6966
	Rolled plate assembly, 1/2 blind nuts, 3/4 NPT	W01-358-7272
	Rubber bellows only	W01-358-5135
Assembly weight.....7.26 kg.		
Force to collapse to minimum height (@ 0 BAR) 89 N.		

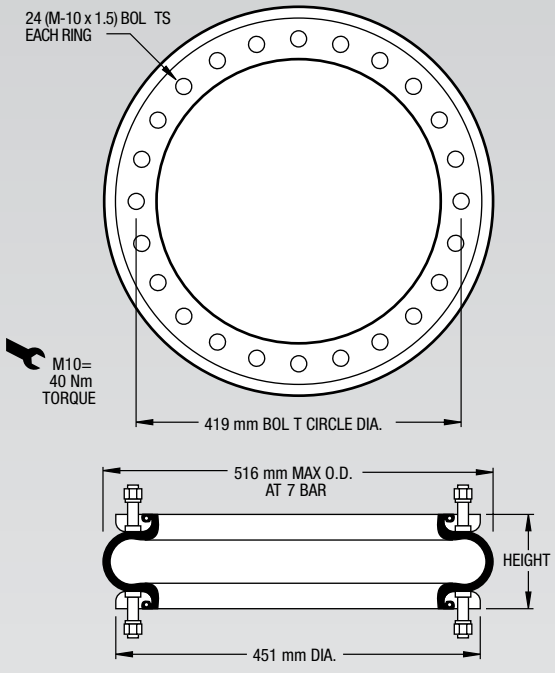

NOTE: A bead ring part is shown. This part is also available with rolled plates. See page 11 for explanation.

**Increase the minimum height by 18 mm. Add 18 mm to the height (bottom axis) before reading loads.*

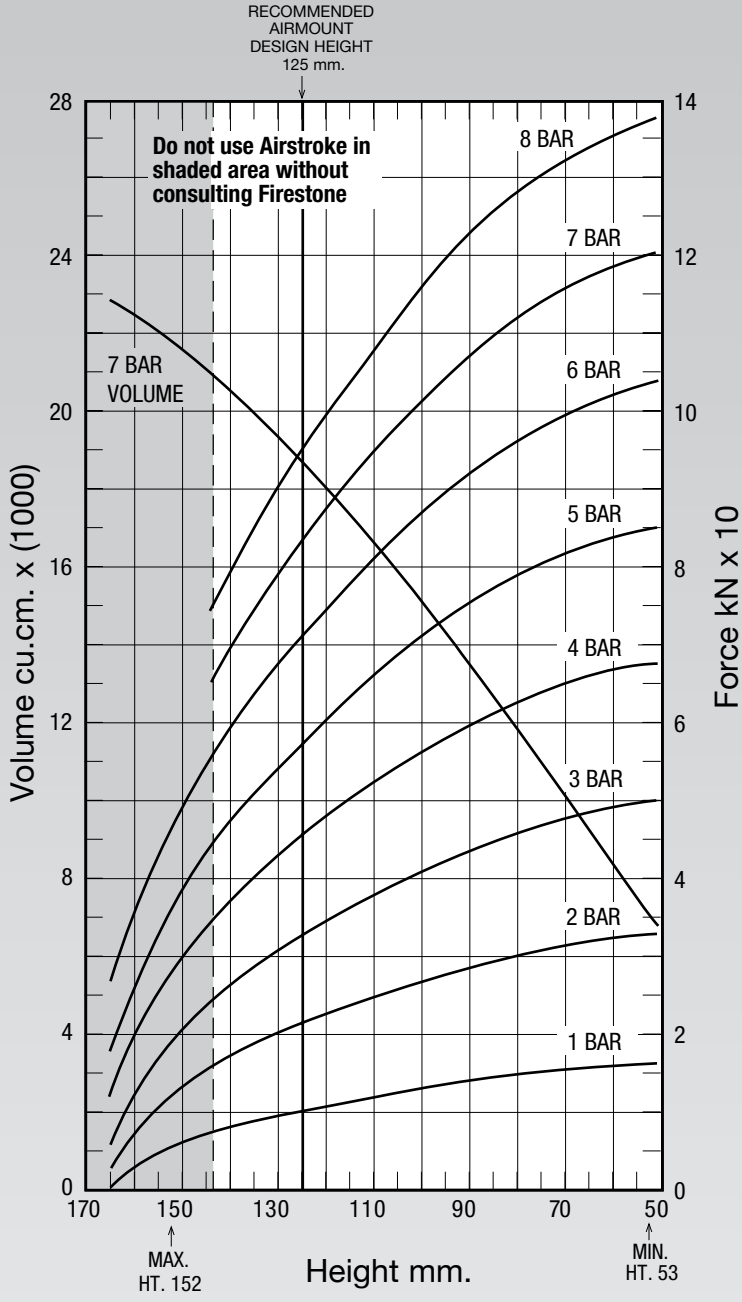

See page 12 for instructions on how to use chart.

Dynamic Characteristics at 125 mm Design Height
(Required for Airmount isolator design only)

Gauge Pressure (BAR)	Load (kN)	Spring Rate (kN/m)	Natural Frequency Hz
3	32.46	812	2.49
4	45.13	1058	2.41
5	57.13	1298	2.38
6	70.61	1535	2.33
7	82.85	1750	2.29

Force Table (Use for Airstroke™ actuator design)

Assembly Height (mm)	Volume @ 7 BAR (cu cm)	EFF Area @ 7 BAR (cm sq)	kN Force @ 3 BAR	@ 4 BAR	@ 5 BAR	@6 BAR	@7 BAR
130	19228	1122	30.41	42.47	53.82	66.78	78.52
120	17985	1239	34.26	47.49	60.07	74.04	86.72
110	16552	1350	37.72	52.13	65.82	80.82	94.46
100	15121	1446	40.64	56.07	70.70	86.63	101.20
90	13511	1531	43.26	59.58	74.98	91.75	107.17
80	11939	1599	45.55	62.46	78.47	95.84	111.88
70	10205	1653	47.72	64.98	81.51	99.23	115.66

NOTE: All Assembly Order Numbers are for bead ring parts unless noted otherwise.

	Description	Assembly Order No.
Style 126	Ribbed neck aluminum bead rings (equal spacing), 45 mm bolts, nuts, washers	W01-M58-6973
Two Ply Bellows	Rolled plate assembly, 1/2 blind nuts, 3/4 BSP	W01-M58-7718
	Rubber bellows only	W01-358-1026
Assembly weight.....9.66 kg.		
Force to collapse to minimum height (@ 0 BAR) 111 N.		

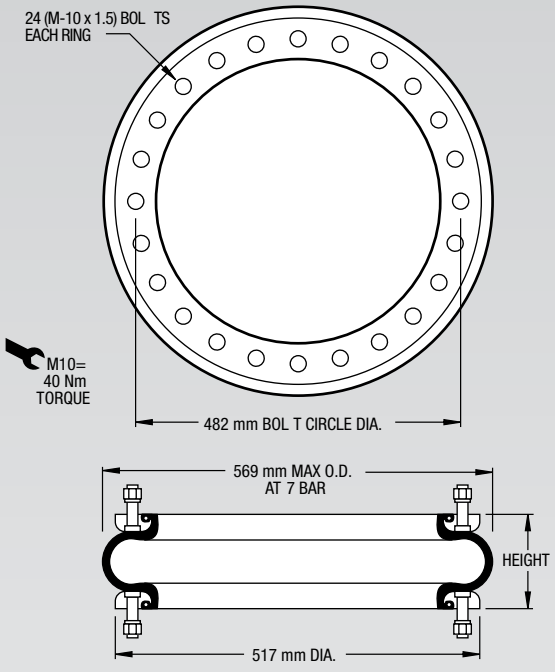

NOTE: A bead ring part is shown. This part is also available with rolled plates. See page 11 for explanation.

**Increase the minimum height by 18 mm. Add 18 mm to the height (bottom axis) before reading loads.*

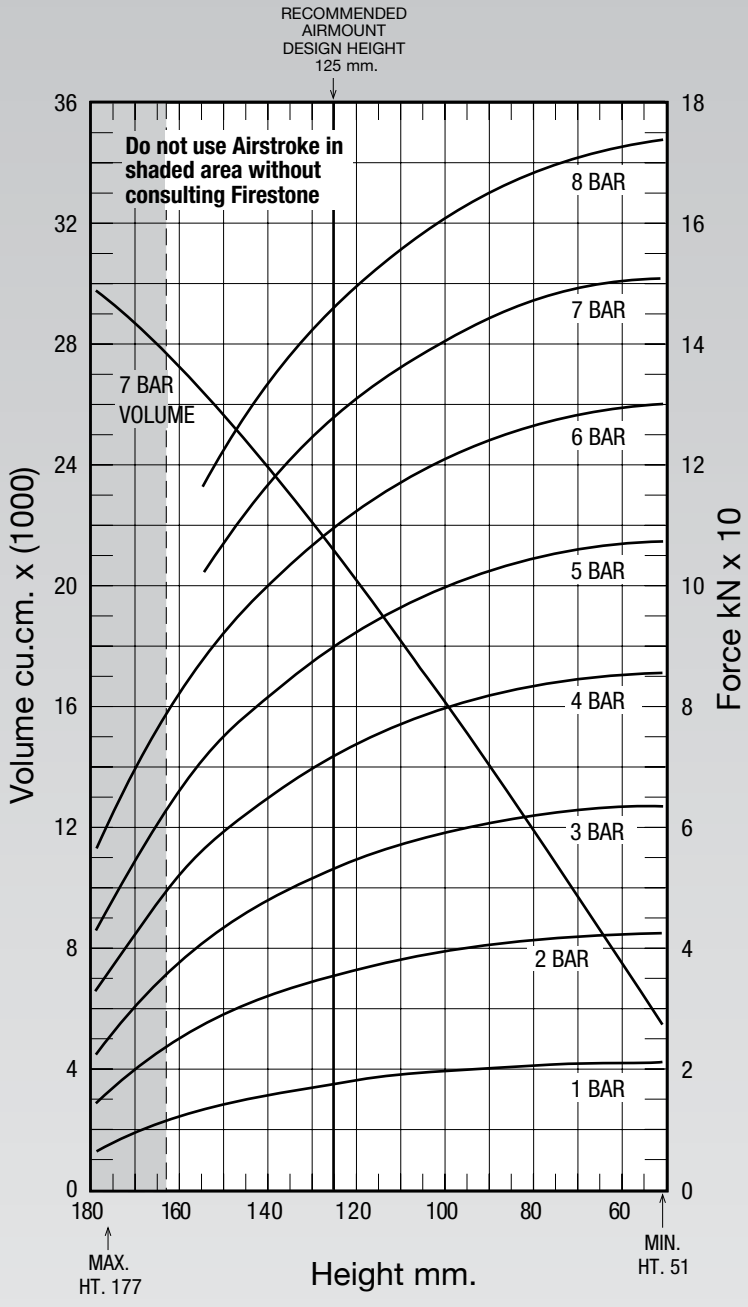

See page 12 for instructions on how to use chart.

Dynamic Characteristics at 125 mm Design Height
(Required for Airmount isolator design only)

Gauge Pressure (BAR)	Load (kN)	Spring Rate (kN/m)	Natural Frequency Hz
3	53.10	1184	2.35
4	71.42	1512	2.29
5	89.75	1828	2.25
6	109.40	2154	2.21
7	127.49	2458	2.19

Force Table (Use for Airstroke™ actuator design)

Assembly Height (mm)	Volume @ 7 BAR (cu cm)	EFF Area @ 7 BAR (cm sq)	kN Force @ 3 BAR	@ 4 BAR	@ 5 BAR	@6 BAR	@7 BAR
160	27186	1355	37.05	51.09	64.81	80.58	94.86
140	23871	1660	47.71	64.48	81.24	99.48	116.20
120	20206	1863	54.46	73.23	91.96	111.95	130.41
100	16216	2006	58.95	79.48	99.52	120.68	140.38
80	12022	2101	62.03	83.35	104.45	126.58	147.09
60	7743	2153	63.76	85.23	106.86	129.60	150.66

NOTE: All Assembly Order Numbers are for bead ring parts unless noted otherwise.

	Description	Assembly Order No.
Style 138-1.5 High Strength Con-struction	Ribbed neck aluminum bead rings (equal spacing), 45 mm bolts, nuts, washers	W01-M58-6972
	Rubber bellows only	W01-358-0147
Assembly weight.....11.11 kg.		
Force to collapse to minimum height (@ 0 BAR) 667 N.		

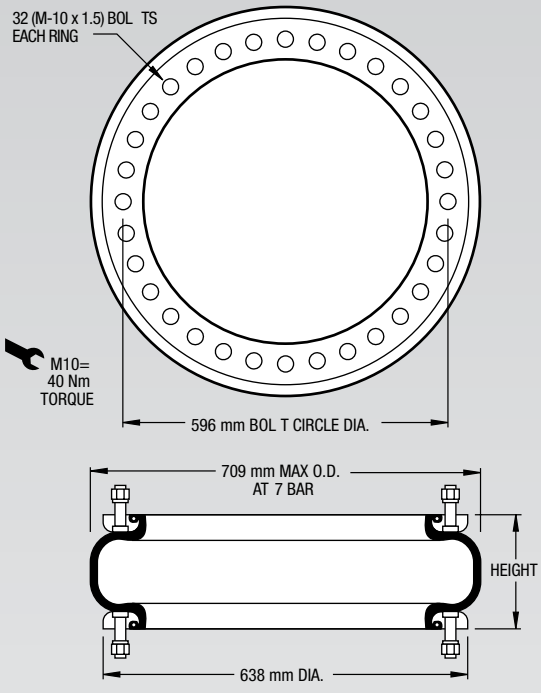

NOTE: A bead ring part is shown. This part is also available with rolled plates. See page 11 for explanation.

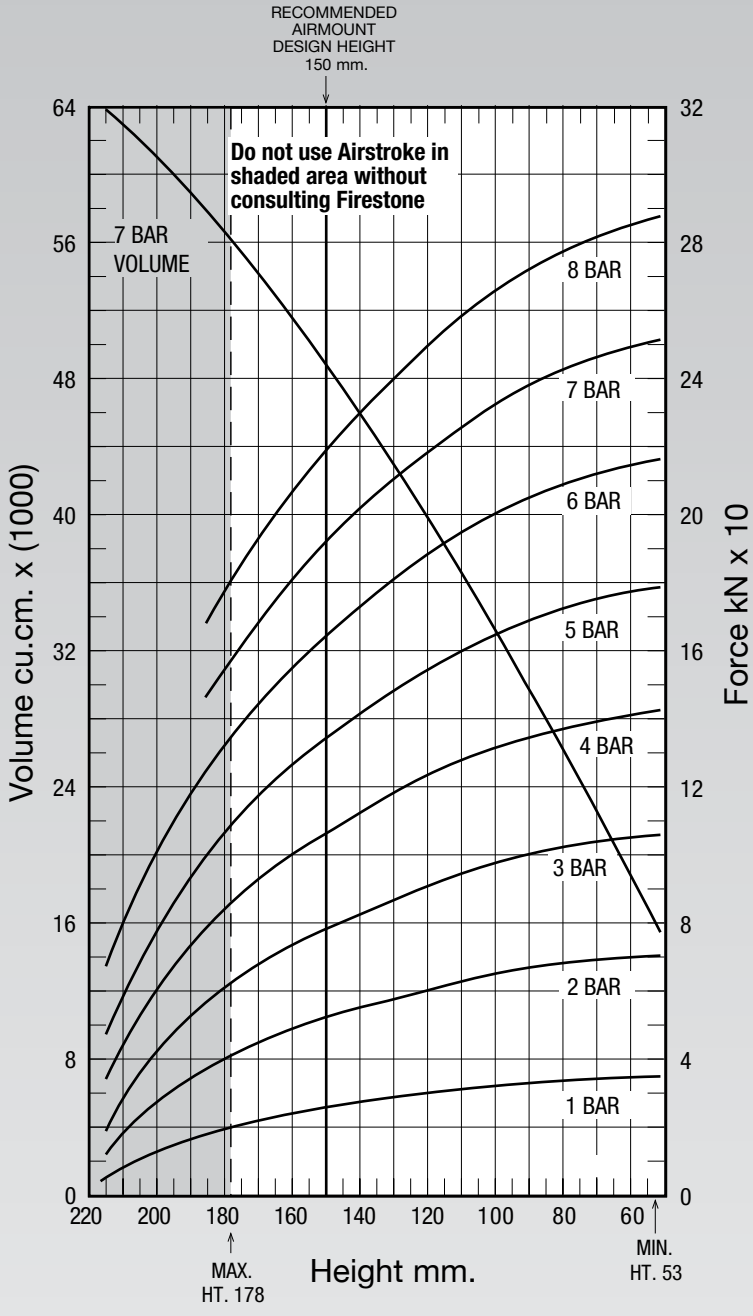

See page 12 for instructions on how to use chart.

Dynamic Characteristics at 150 mm Design Height
(Required for Airmount isolator design only)

Gauge Pressure (BAR)	Load (kN)	Spring Rate (kN/m)	Natural Frequency Hz
3	78.40	1361	2.08
4	106.51	1742	2.02
5	134.29	2111	1.98
6	164.07	2488	1.94
7	191.19	2844	1.92

Force Table (Use for Airstroke™ actuator design)

Assembly Height (mm)	Volume @ 7 BAR (cu cm)	EFF Area @ 7 BAR (cm sq)	kN Force @ 3 BAR	@ 4 BAR	@ 5 BAR	@6 BAR	@7 BAR
180	56558	2200	60.35	83.40	106.09	131.40	153.99
160	51417	2573	73.03	99.66	125.96	154.37	180.09
140	45680	2871	83.06	112.54	141.62	172.60	200.97
120	39615	3120	91.25	123.17	154.62	187.80	218.40
100	33114	3322	97.72	131.55	165.06	200.15	232.53
80	26237	3471	102.53	137.62	172.72	209.27	242.92
60	19043	3567	105.89	141.79	177.80	215.18	249.69

NOTE: All Assembly Order Numbers are for bead ring parts unless noted otherwise.

	Description	Assembly Order No.
Style 148-1	Ribbed neck aluminum bead rings (equal spacing), 45 mm bolts, nuts, washers	W01-M58-6969
High Strength Con-struction	Rubber bellows only	W01-358-1021
Assembly weight.....21.00 kg.		
Force to collapse to minimum height (@ 0 BAR) 1378 N.		

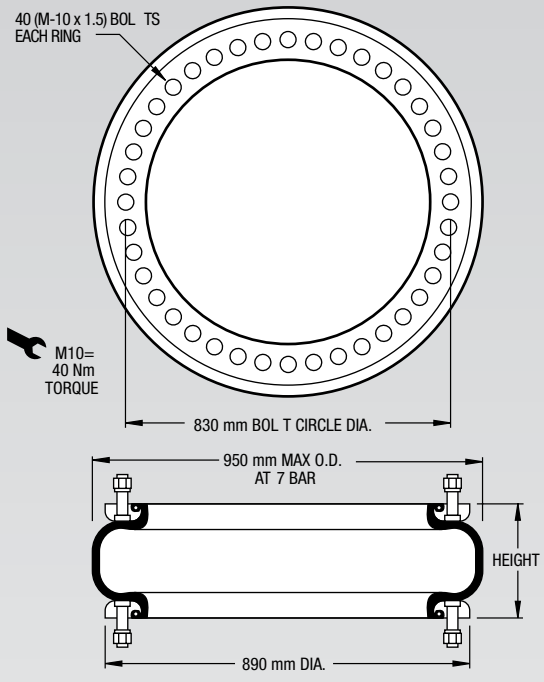

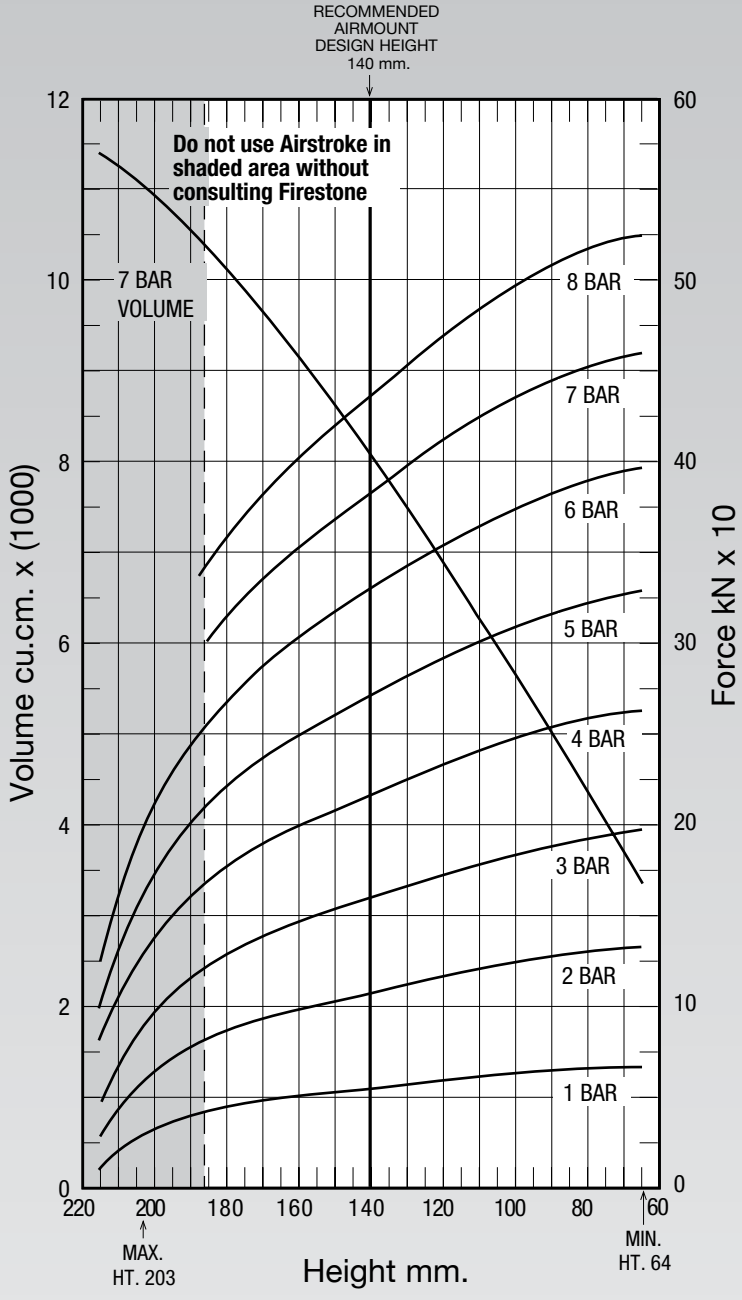

NOTE: The effective length of the 45 mm bolt is 23 mm in this bead ring.

See page 12 for instructions on how to use chart.

Dynamic Characteristics at 140 mm Design Height
(Required for Airmount isolator design only)

Gauge Pressure (BAR)	Load (kN)	Spring Rate (kN/m)	Natural Frequency Hz
3	159.12	2747	2.07
4	214.60	3485	2.01
5	268.86	4248	1.98
6	327.14	5077	1.96
7	381.44	5830	1.95

Force Table (Use for Airstroke™ actuator design)

Assembly Height (mm)	Volume @ 7 BAR (cu cm)	EFF Area @ 7 BAR (cm sq)	kN Force @ 3 BAR	@ 4 BAR	@ 5 BAR	@6 BAR	@7 BAR
180	100532	4456	126.24	174.51	218.75	266.95	311.89
160	90826	4998	144.99	197.24	247.10	300.31	349.83
140	79989	5450	159.12	214.60	268.86	327.14	381.44
120	68618	5857	170.91	230.51	289.23	351.92	409.95
100	56587	6199	181.41	245.45	307.57	373.08	433.88
80	44091	6455	191.45	257.88	321.60	388.59	451.81

NOTE: All Assembly Order Numbers are for bead plate parts unless noted otherwise.

	Description	Assembly Order No.
Style 25 Two Ply Bellows	Blind nuts, 1/4 BSP	W01-M58-6160
	Socket head aluminum bead rings (bolts, nuts, washers not included–use M6 cap screws)	W01-358-0030
	Rubber bellows only (no girdle hoop)	W01-358-0025
Assembly weight .....1.72 kg.		
Force to collapse to minimum height (@ 0 BAR) 85 N.		

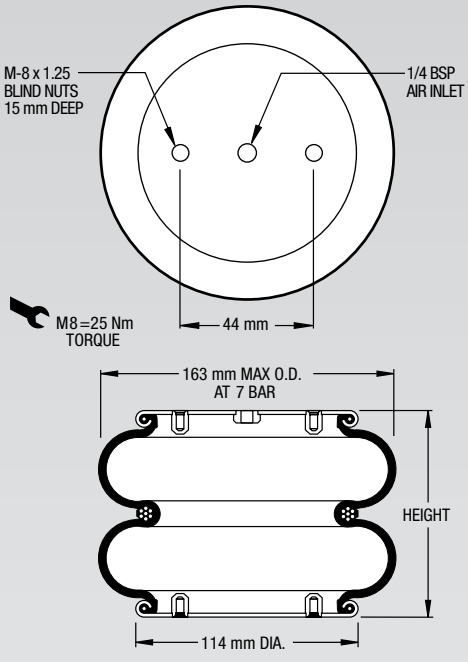

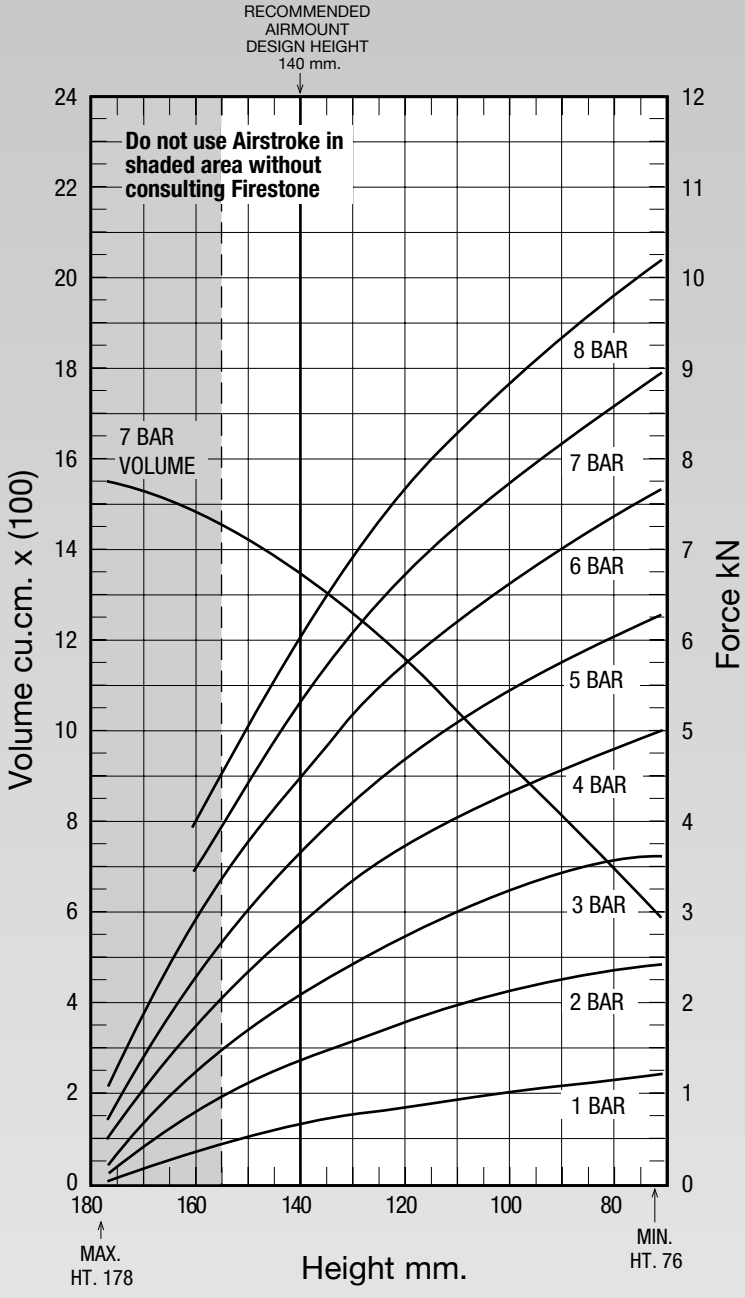

See page 12 for instructions on how to use chart.

NOTE: A bead plate part is shown. This part is also available with bead rings. Bolts are not included. See pages 8-10 for explanation.

Dynamic Characteristics at 140 mm Design Height
(Required for Airmount isolator design only)

Gauge Pressure (BAR)	Load (kN)	Spring Rate (kN/m)	Natural Frequency Hz
3	2.03	62	2.75
4	2.81	80	2.67
5	3.63	98	2.60
6	4.50	117	2.55
7	5.30	135	2.52

Force Table (Use for Airstroke™ actuator design)

Assembly Height (mm)	Volume @ 7 BAR (cu cm)	EFF Area @ 7 BAR (cm sq)	kN Force @ 3 BAR	@ 4 BAR	@ 5 BAR	@6 BAR	@7 BAR
150	1421	62	1.64	2.29	2.92	3.66	4.32
140	1344	74	2.03	2.81	3.63	4.50	5.30
130	1253	85	2.39	3.27	4.13	5.09	5.96
120	1159	95	2.69	3.66	4.61	5.66	6.62
110	1049	103	2.97	4.00	5.04	6.16	7.18
100	939	109	3.21	4.27	5.38	6.57	7.65
90	817	116	3.41	4.52	5.69	6.95	8.10
80	698	122	3.55	4.76	5.98	7.31	8.52

NOTE: Replacement for Style 255-1.5

267-1.5 Firestone AIRSTROKE ACTUATORS AIRMOUNT ISOLATORS

NOTE: All Assembly Order Numbers are for bead plate parts unless noted otherwise.

	Description	Assembly Order No.
Style 255-1.5 Two Ply Bellows	Blind nuts, 1/4 BSP	W01-M58-6105
	Socket head aluminum bead rings (bolts, nuts, washers not included, use cap screws)	W01-358-6833
	Rubber bellows only	W01-358-0048
Assembly weight .....1.7 kg.		
Force to collapse to minimum height (@ 0 BAR) 190 N.		

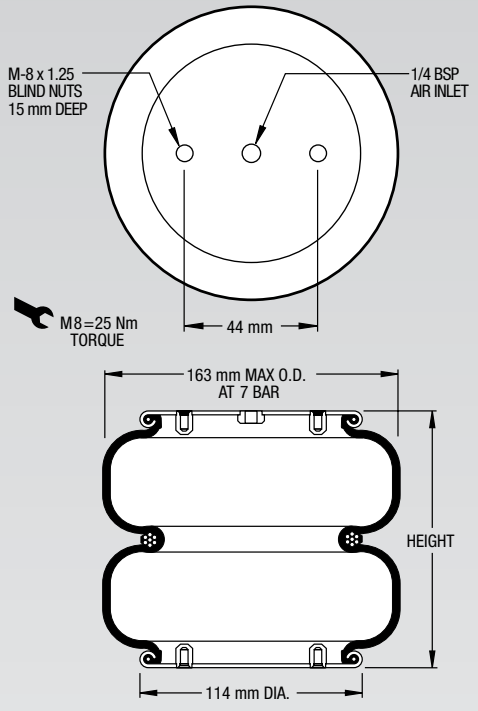

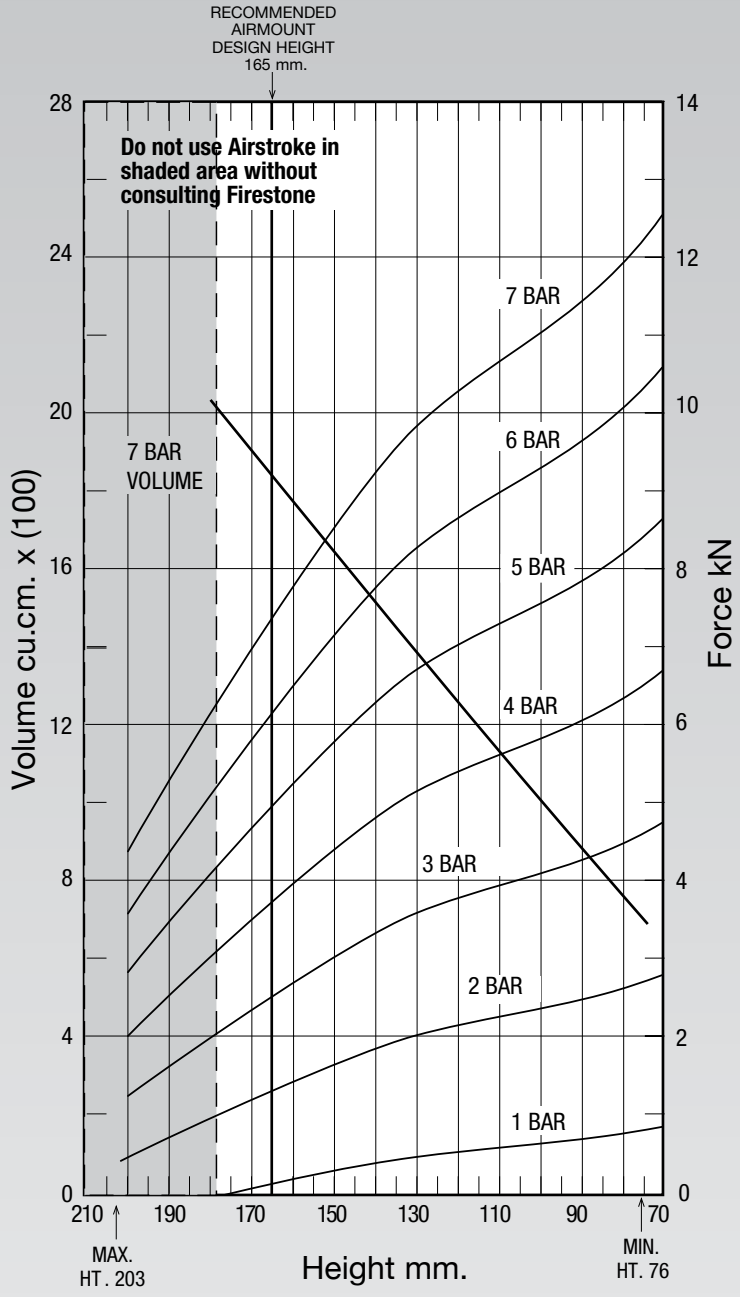

NOTE: A bead plate part is shown. This part is also available with bead rings. Bolts are not included. See pages 8-10 for explanation.

See page 12 for instructions on how to use chart.

Dynamic Characteristics at 165 mm Design Height
(Required for Airmount isolator design only)

Gauge Pressure (BAR)	Load (kN)	Spring Rate (kN/m)	Natural Frequency Hz
3	3.2	59	2.30
4	4.3	73	2.21
5	5.3	90	2.16
6	6.5	106	2.11
7	7.5	121	2.08

Force Table (Use for Airstroke™ actuator design)

Assembly Height (mm)	Volume @ 7 BAR (cu cm)	EFF Area @ 7 BAR (cm sq)	kN Force @ 3 BAR	@ 4 BAR	@ 5 BAR	@6 BAR	@7 BAR
175	2048	86	2.5	3.4	4.3	5.2	6.0
150	1786	107	3.2	4.3	5.3	6.4	7.5
125	1491	123	3.6	4.9	6.1	7.3	8.6
100	1163	134	4.0	5.3	6.7	8.0	9.4
75	803	143	4.2	5.7	7.1	8.5	10.0
60	623	156	4.7	6.2	7.8	9.4	10.9

NOTE: All Assembly Order Numbers are for bead plate parts unless noted otherwise.

	Description	Assembly Order No.
Style 224 Two Ply Bellows	Blind nuts, 1/4 BSP	W01-M58-6400
	Rubber Bellows only	W01-358-5101
	Countersunk steel bead ring	W01-358-3407
Assembly weight.....2.27 kg.		
Force to collapse to minimum height (@ 0 BAR) 62 N.		

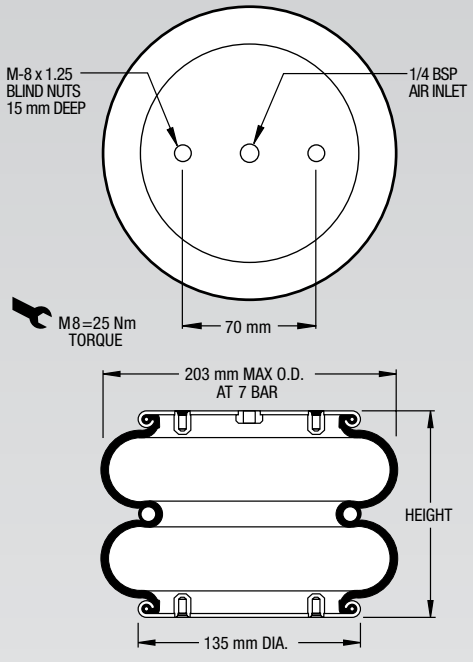

NOTE: A bead plate part is shown. This part is also available with bead rings. See pages 8-10 for explanation.

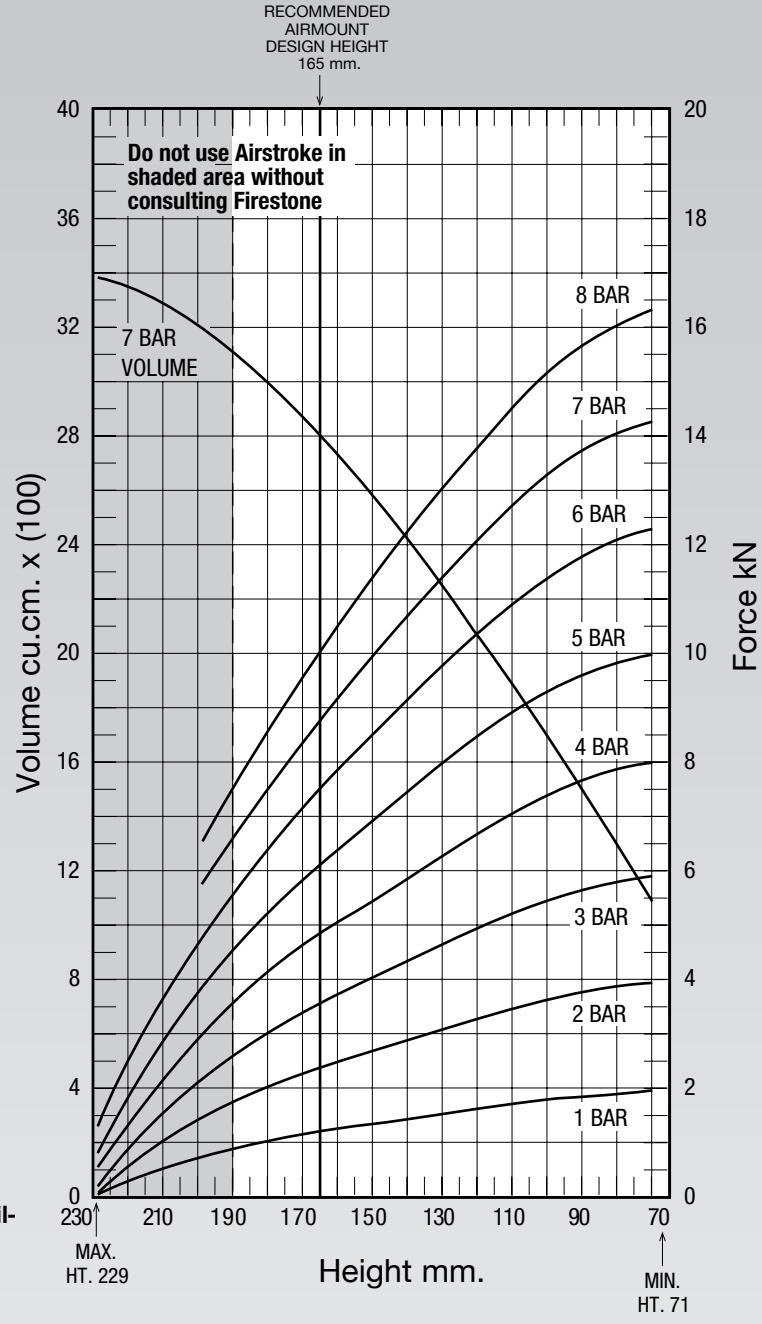

See page 12 for instructions on how to use chart.

Dynamic Characteristics at 165 mm Design Height
(Required for Airmount isolator design only)

Gauge Pressure (BAR)	Load (kN)	Spring Rate (kN/m)	Natural Frequency Hz
3	3.48	69	2.21
4	4.74	88	2.15
5	6.01	109	2.13
6	7.40	132	2.11
7	8.65	152	2.09

Force Table (Use for Airstroke™ actuator design)

Assembly Height (mm)	Volume @ 7 BAR (cu cm)	EFF Area @ 7 BAR (cm sq)	kN Force @ 3 BAR	@ 4 BAR	@ 5 BAR	@6 BAR	@7 BAR
180	3002	105	2.90	4.00	5.08	6.28	7.37
160	2730	129	3.64	4.95	6.28	7.73	9.03
140	2411	151	4.29	5.80	7.35	9.05	10.58
120	2063	172	4.87	6.61	8.35	10.27	12.02
100	1690	189	5.37	7.34	9.24	11.32	13.23
80	1300	201	5.76	7.85	9.88	12.05	14.04

NOTE: All Assembly Order Numbers are for bead plate parts unless noted otherwise.

	Description	Assembly Order No.
Style 26	Blind nuts, 1/4 BSP	W01-M58-6353
	Blind nuts, 3/4 BSP	W01-M58-6387
Two Ply Bellows	Countersunk steel bead rings, 40 mm bolts, nuts, washers	W01-M58-6988
	Rubber bellows only	W01-358-0142
Assembly weight.....2.40 kg.		
Force to collapse to minimum height (@ 0 BAR) 102 N.		

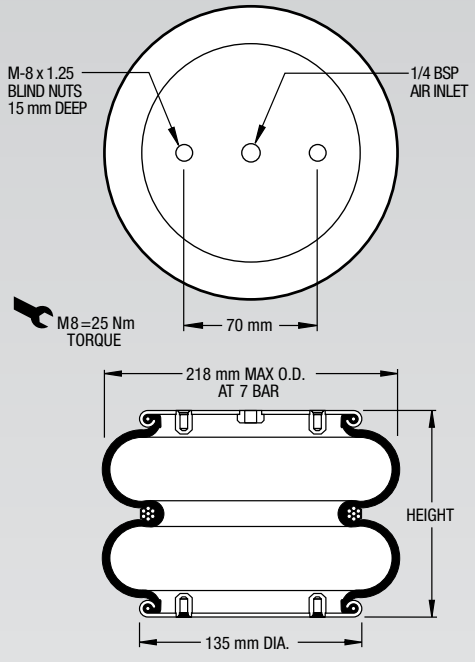

NOTE: A bead plate part is shown. This part is also available with bead rings. See pages 8-10 for explanation.

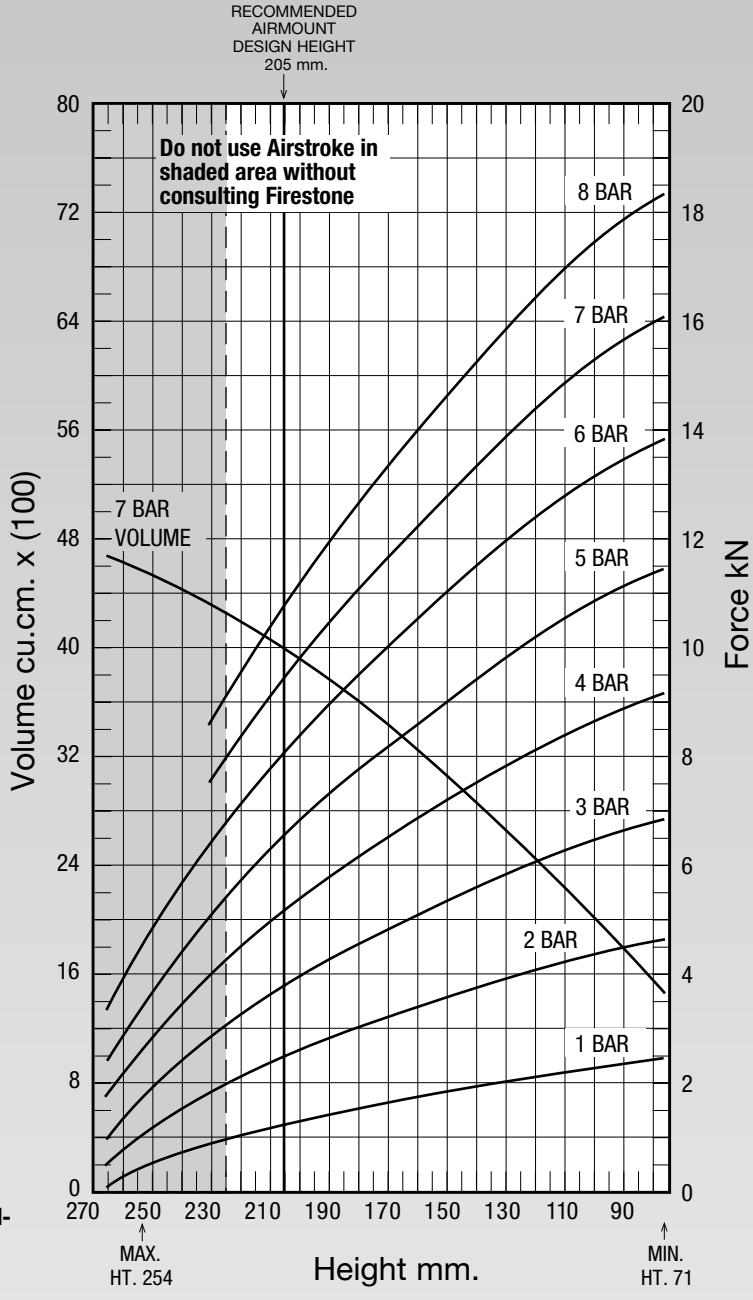

See page 12 for instructions on how to use chart.

Dynamic Characteristics at 205 mm Design Height
(Required for Airmount isolator design only)

Gauge Pressure (BAR)	Load (kN)	Spring Rate (kN/m)	Natural Frequency Hz
3	3.74	59	1.99
4	5.15	76	1.92
5	6.52	93	1.88
6	8.03	109	1.83
7	9.41	124	1.81

Force Table (Use for Airstroke™ actuator design)

Assembly Height (mm)	Volume @ 7 BAR (cu cm)	EFF Area @ 7 BAR (cm sq)	kN Force @ 3 BAR	@ 4 BAR	@ 5 BAR	@6 BAR	@7 BAR
220	4202	118	3.19	4.44	5.66	7.06	8.29
200	3918	139	3.90	5.35	6.76	8.32	9.73
180	3594	157	4.51	6.12	7.70	9.43	11.00
160	3233	174	5.08	6.82	8.57	10.46	12.20
140	2840	191	5.60	7.48	9.40	11.46	13.35
120	2434	206	6.05	8.09	10.16	12.36	14.38
100	2007	218	6.42	8.63	10.81	13.11	15.25
80	1564	228	6.76	9.08	11.34	13.72	15.94

AIRSTROKE™ ACTUATORS AIRMOUNT™ ISOLATORS Firestone 274

NOTE: All Assembly Order Numbers are for bead plate parts unless noted otherwise.

	Description	Assembly Order No.
Style 274 Two Ply Bellows	Blind nuts, 1/4 BSP	W01-M58-6187
	Blind nuts, 1/4 BSP, bumper	W01-M58-6188
	Blind nuts, 3/4 BSP	W01-M58-6185
	Blind nuts, 3/4 BSP, bumper	W01-M58-6186
	Countersunk steel bead rings, 40 mm bolts, nuts, washers	W01-M58-6990
	Rubber bellows only	W01-358-0297
Assembly weight.....3.40 kg.		
Force to collapse to minimum height (@ 0 BAR) 62 N.		

Style 202 High Strength Con-struction	Blind nuts, 1/4 BSP	W01-M58-6192
	Blind nuts, 3/4 BSP	W01-M58-6190

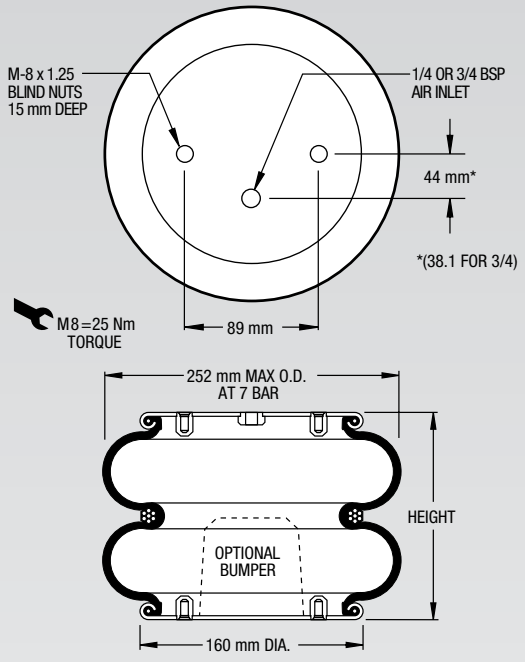

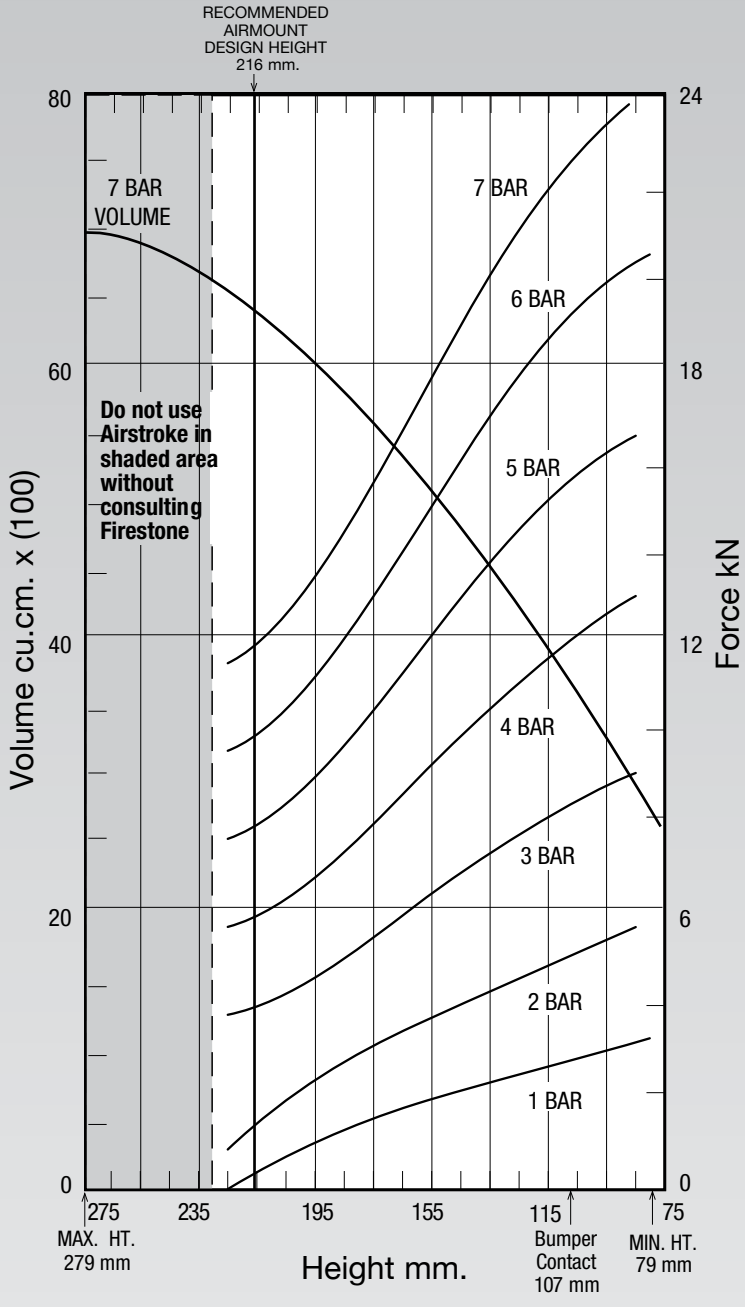

NOTE: A bead plate part is shown. This part is also available with bead rings. See pages 8-10 for explanation.

See page 12 for instructions on how to use chart.

Dynamic Characteristics at 216 mm Design Height
(Required for Airmount isolator design only)

Gauge Pressure (BAR)	Load (kN)	Spring Rate (kN/m)	Natural Frequency Hz
3	5.6	77.93	2.01
4	7.5	98.23	1.96
5	9.3	122.17	1.89
6	11.2	146.53	1.87
7	13.1	168.24	1.85

Force Table (Use for Airstroke™ actuator design)

Assembly Height (mm)	Volume @ 7 BAR (cu cm)	EFF Area @ 7 BAR (cm sq)	kN Force @ 3 BAR	@ 4 BAR	@ 5 BAR	@6 BAR	@7 BAR
225	6424	174	5.2	6.9	8.7	10.4	12.2
200	5981	186	5.5	7.4	9.2	11.1	13.0
175	5424	228	6.8	9.1	11.4	13.6	15.9
150	4769	260	7.8	10.4	13.0	15.6	18.2
125	4048	291	8.7	11.6	14.5	17.4	20.3
100	3228	320	9.6	12.8	16.0	19.2	22.4

NOTE: All Assembly Order Numbers are for bead plate parts unless noted otherwise.

	Description	Assembly Order No.
Style 20-2 Two Ply Bellows	Blind nuts, 1/4 BSP	W01-M58-6183
	Blind nuts, 3/4 BSP	W01-M58-6194
	Countersunk steel bead rings, 40 mm bolts, nuts, washers	W01-M58-6880
	Rubber bellows only	W01-358-0305
Assembly weight.....3.50 kg.		
Force to collapse to minimum height (@ 0 BAR) 75 N.		

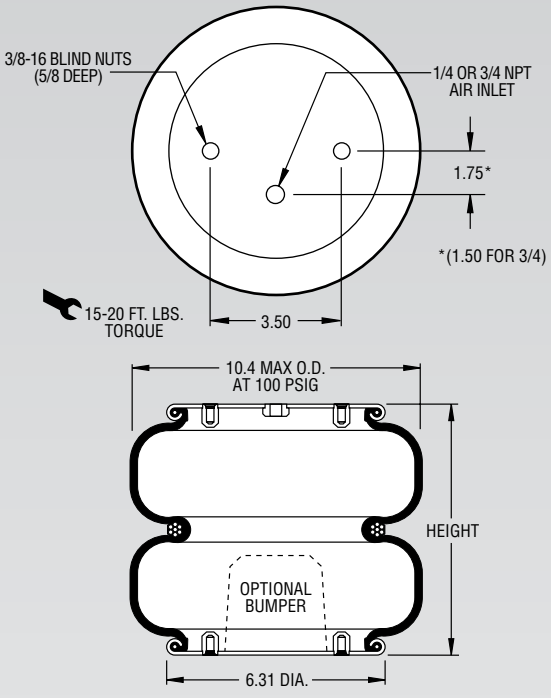

NOTE: A bead plate part is shown. This part is also available with bead rings. See pages 8-10 for explanation.

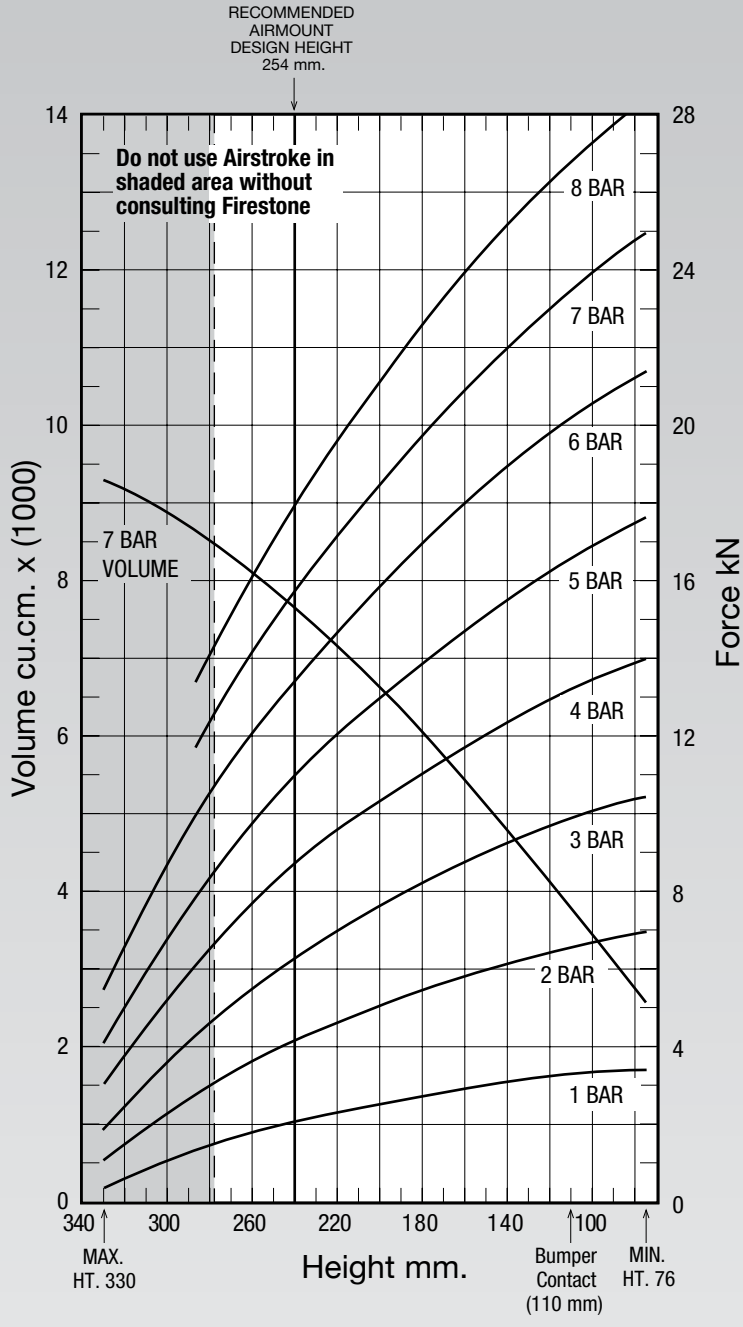

See page 12 for instructions on how to use chart.

Dynamic Characteristics at 254 mm Design Height
(Required for Airmount isolator design only)

Gauge Pressure (BAR)	Load (kN)	Spring Rate (kN/m)	Natural Frequency Hz
3	5.71	71	1.76
4	8.12	91	1.67
5	10.15	108	1.63
6	12.45	126	1.59
7	14.58	144	1.57

Force Table (Use for Airstroke™ actuator design)

Assembly Height (mm)	Volume @ 7 BAR (cu cm)	EFF Area @ 7 BAR (cm sq)	kN Force @ 3 BAR	@ 4 BAR	@ 5 BAR	@6 BAR	@7 BAR
280	8531	175	4.52	6.43	8.27	10.41	12.28
260	8130	201	5.43	7.58	9.65	11.97	14.05
240	7682	223	6.24	8.60	10.86	13.36	15.63
220	7189	244	6.96	9.51	11.95	14.61	17.07
200	6637	263	7.58	10.31	12.94	15.79	18.43
180	6048	282	8.16	11.03	13.85	16.91	19.73
160	5424	299	8.70	11.70	14.71	17.96	20.96
140	4770	315	9.23	12.33	15.49	18.89	22.02

NOTE: All Assembly Order Numbers are for bead plate parts unless noted otherwise.

	Description	Assembly Order No.
Style 22 Two Ply Bellows	Blind nuts, 1/4 BSP	W01-M58-6381
	Blind nuts, 1/4 BSP, bumper	W01-M58-6382
	Blind nuts, 3/4 BSP	W01-M58-6200
	Blind nuts, 3/4 BSP, bumper	W01-M58-6201
	Countersunk steel bead rings, 40 mm bolts, nuts, washers	W01-M58-7524
	Rubber bellows only	W01-358-0226
Assembly weight (bead plate version, no bumper)		5.8 kg.
Force to collapse to minimum height (@ 0 BAR)		88.9 N.

Style 210 High Strength Con-struction	Blind nuts, 1/4 BSP	W01-M58-6212
	Blind nuts, 3/4 BSP	W01-M58-6210
	Countersunk steel bead rings, bolts, nuts, washers	W01-M58-6976
	Rubber bellows only	W01-358-7928

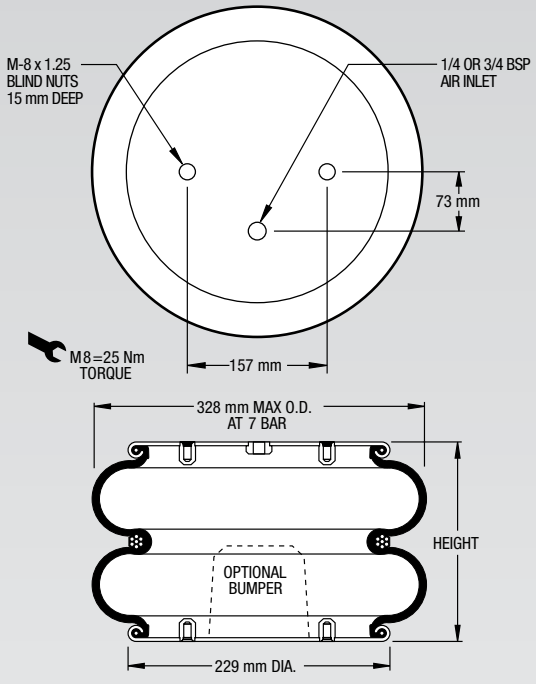

NOTE: A bead plate part is shown. This part is also available with bead rings. See pages 8-10 for explanation.

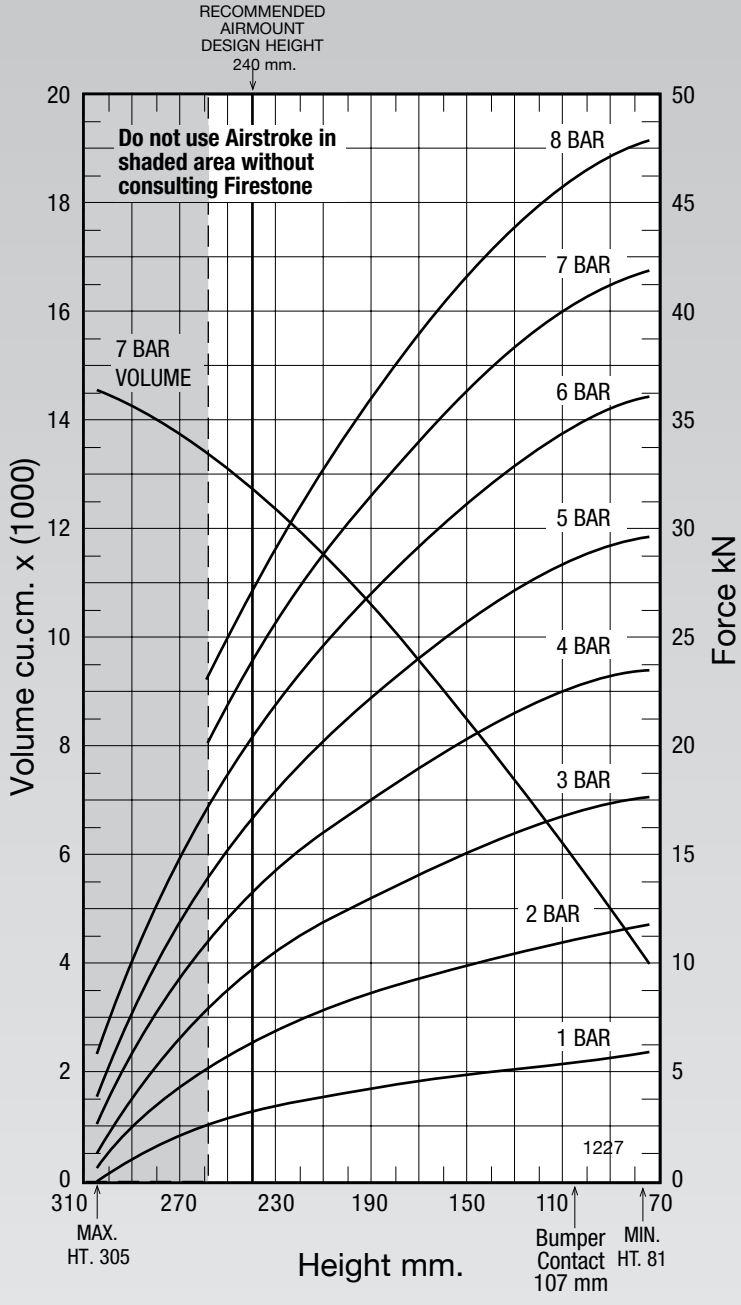

See page 12 for instructions on how to use chart.

Dynamic Characteristics at 240 mm Design Height
(Required for Airmount isolator design only)

Gauge Pressure (BAR)	Load (kN)	Spring Rate (kN/m)	Natural Frequency Hz
3	9.68	137	1.88
4	13.12	175	1.82
5	16.56	215	1.80
6	20.35	255	1.77
7	23.81	294	1.75

Force Table (Use for Airstroke™ actuator design)

Assembly Height (mm)	Volume @ 7 BAR (cu cm)	EFF Area @ 7 BAR (cm sq)	kN Force @ 3 BAR	@ 4 BAR	@ 5 BAR	@6 BAR	@7 BAR
240	12776	340	9.68	13.12	16.56	20.35	23.81
220	12002	389	11.22	15.11	19.05	23.31	27.21
200	11107	431	12.49	16.79	21.19	25.89	30.16
180	10127	469	13.60	18.28	23.10	28.21	32.81
160	9072	504	14.61	19.64	24.85	30.32	35.24
140	7952	535	15.56	20.90	26.42	32.23	37.44
120	6815	562	16.42	22.03	27.80	33.85	39.32
100	5637	583	17.15	22.94	28.90	35.12	40.78

NOTE: All Assembly Order Numbers are for bead plate parts unless noted otherwise.

	Description	Assembly Order No.
Style 22-1.5	Blind nuts, 1/4 BSP	W01-M58-6384
	Blind nuts, 3/4 BSP	W01-M58-6383
Two Ply Bellows	Rubber bellows only	W01-358-0259
Assembly weight (bead plate version, no bumper)		5.85 kg.
Force to collapse to minimum height (@ 0 BAR)		116 N.

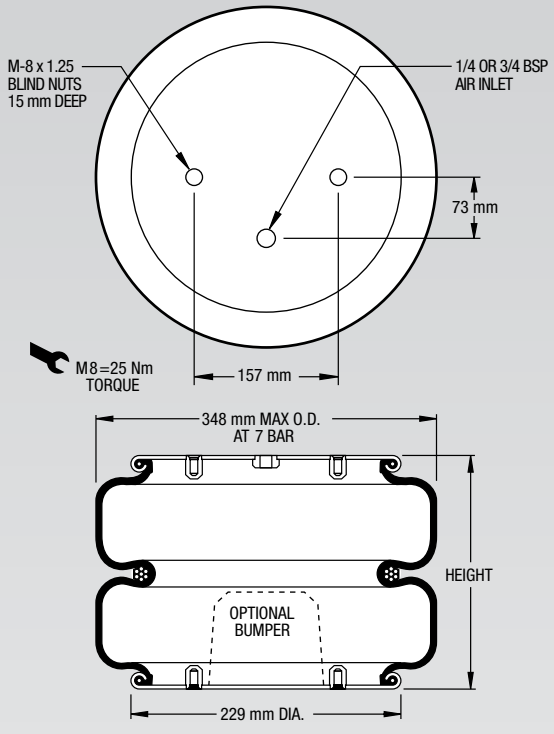

NOTE: The bellows extends beyond the bead plates at minimum height.

NOTE: A bead plate part is shown. This part is also available with bead rings. See pages 8-10 for explanation.

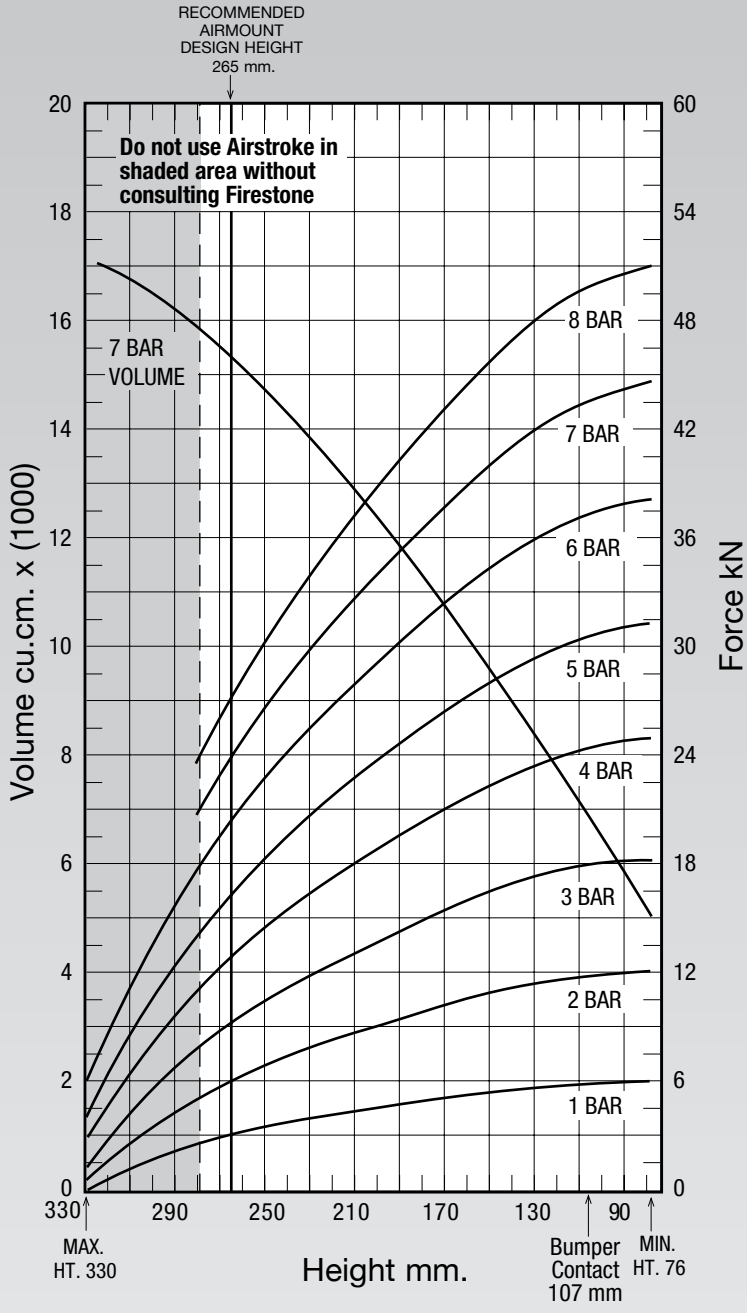

See page 12 for instructions on how to use chart.

Dynamic Characteristics at 265 mm Design Height
(Required for Airmount isolator design only)

Gauge Pressure (BAR)	Load (kN)	Spring Rate (kN/m)	Natural Frequency Hz
3	9.12	129	1.87
4	12.82	170	1.82
5	16.30	208	1.78
6	20.28	246	1.74
7	23.86	282	1.71

Force Table (Use for Airstroke™ actuator design)

Assembly Height (mm)	Volume @ 7 BAR (cu cm)	EFF Area @ 7 BAR (cm sq)	kN Force @ 3 BAR	@ 4 BAR	@ 5 BAR	@6 BAR	@7 BAR
270	15435	327	8.67	12.21	15.55	19.41	22.87
230	13823	424	11.73	16.31	20.58	25.32	29.64
190	11833	502	14.16	19.45	24.50	30.04	35.13
150	9521	571	16.31	22.17	27.91	34.20	39.97
110	7032	619	17.73	24.18	30.37	37.11	43.34
80	4521	635	18.21	24.84	31.20	38.10	44.48

NOTE: All Assembly Order Numbers are for bead plate parts unless noted otherwise.

	Description	Assembly Order No.
Style 21 Two Ply Bellows	Blind nuts, 1/4 BSP	W01-M58-6114
	Blind nuts, 1/4 BSP, bumper	W01-M58-6115
	Blind nuts, 3/4 BSP	W01-M58-6112
	Blind nuts, 3/4 BSP, bumper	W01-M58-6113
	Countersunk steel bead rings, 40 mm bolts, nuts, washers	W01-M58-7710
	Rubber bellows only	W01-358-0213
Assembly weight.....7.85 kg.		
Force to collapse to minimum height (@ 0 BAR) 98 N.		

Style 205 Four Ply Bellows	Blind nuts, 1/4 BSP	W01-M58-6079
	Blind nuts, 3/4 BSP	W01-M58-6077
	Rubber bellows only	W01-358-7929

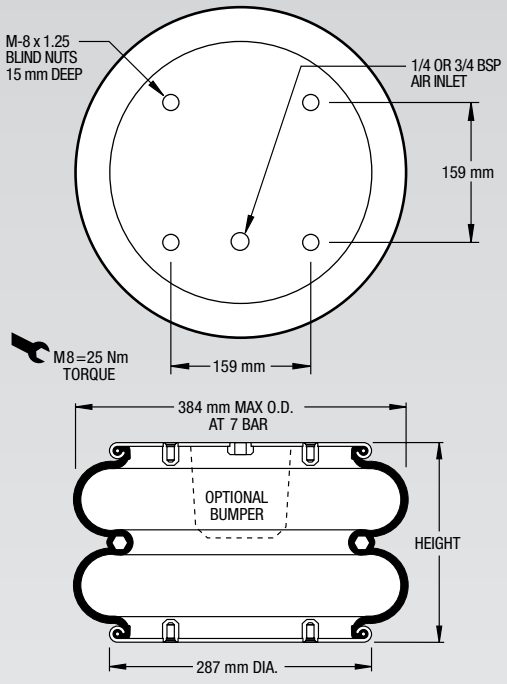

NOTE: A bead plate part is shown. This part is also available with bead rings. See pages 8-10 for explanation.

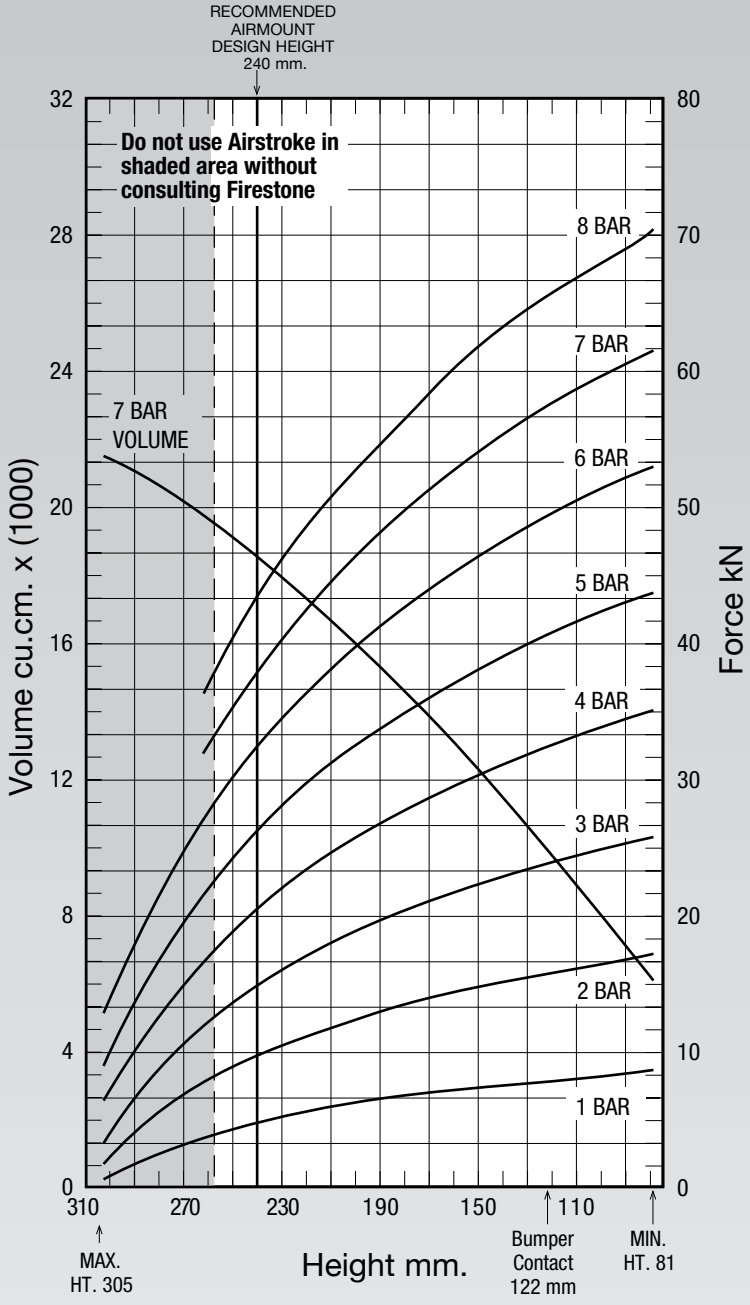

See page 12 for instructions on how to use chart.

Dynamic Characteristics at 240 mm Design Height
(Required for Airmount isolator design only)

Gauge Pressure (BAR)	Load (kN)	Spring Rate (kN/m)	Natural Frequency Hz
3	14.67	200	1.84
4	20.23	262	1.79
5	25.85	318	1.75
6	31.99	375	1.71
7	37.38	430	1.69

Force Table (Use for Airstroke™ actuator design)

Assembly Height (mm)	Volume @ 7 BAR (cu cm)	EFF Area @ 7 BAR (cm sq)	kN Force @ 3 BAR	@ 4 BAR	@ 5 BAR	@6 BAR	@7 BAR
240	18574	534	14.67	20.23	25.85	31.99	37.38
220	17382	598	16.77	23.02	29.19	35.86	41.84
200	16033	651	18.51	25.33	31.96	39.08	45.56
180	14575	698	20.01	27.29	34.36	41.93	48.87
160	13022	741	21.33	29.01	36.53	44.56	51.90
140	11385	780	22.48	30.56	38.50	46.92	54.61
120	9732	813	23.47	31.96	40.21	48.91	56.88
100	8023	839	24.34	33.24	41.65	50.51	58.72

NOTE: All Assembly Order Numbers are for bead plate parts unless noted otherwise.

	Description	Assembly Order No.
Style 21-2 Two Ply Bellows	Blind nuts, 1/4 BSP	W01-M58-6377
	Blind nuts, 1/4 BSP, rubber bumper	W01-M58-6379
	Blind nuts, 3/4 BSP	W01-M58-6378
	Rubber bellows only	W01-358-0140
Assembly weight (bead plate version, no bumper) 8.26kg.		
Force to collapse to minimum height (@ 0 BAR) 156 N.		

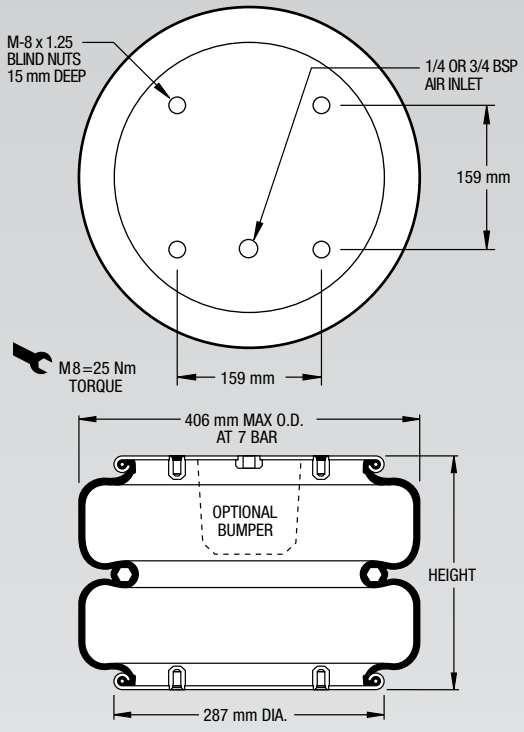

NOTE: The bellows extends beyond the bead plates at minimum height.

NOTE: A bead plate part is shown. This part is also available with bead rings. See pages 8-10 for explanation.

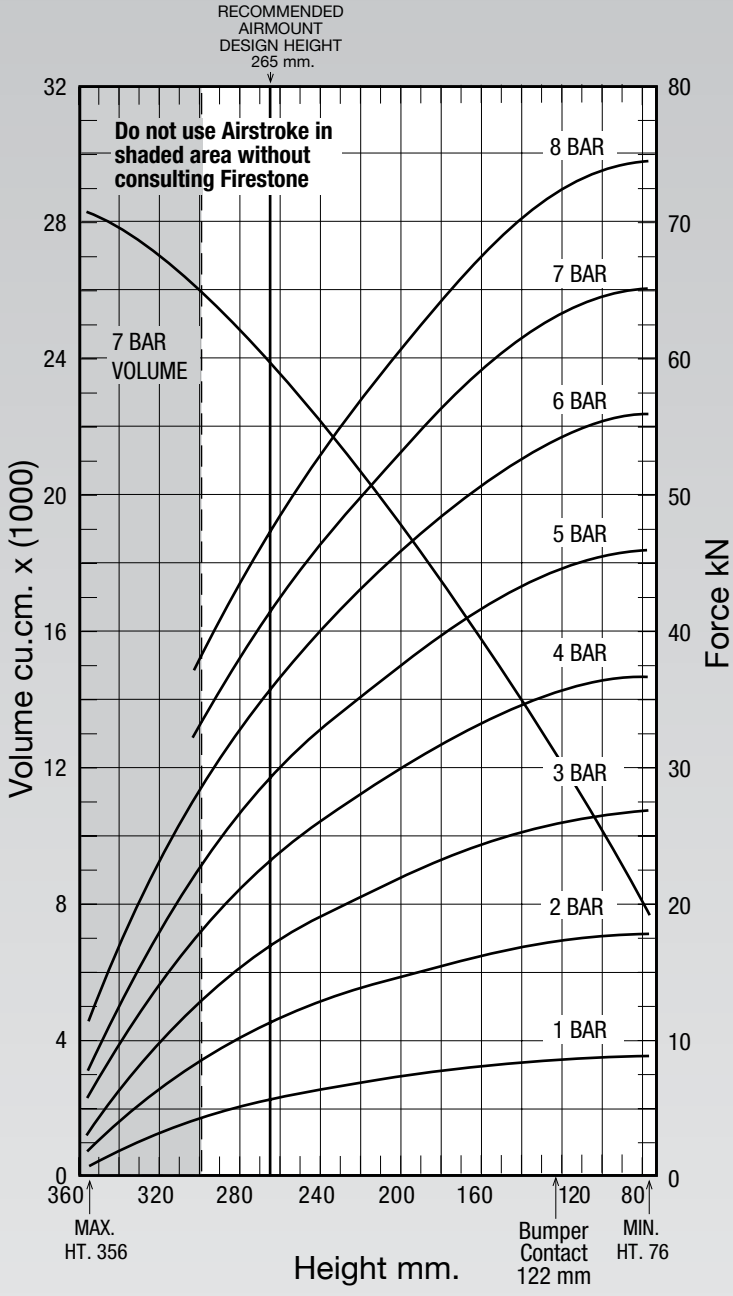

See page 12 for instructions on how to use chart.

Dynamic Characteristics at 265 mm Design Height
(Required for Airmount isolator design only)

Gauge Pressure (BAR)	Load (kN)	Spring Rate (kN/m)	Natural Frequency Hz
3	16.48	183	1.66
4	22.69	238	1.62
5	28.70	289	1.58
6	35.33	340	1.55
7	41.34	390	1.53

Force Table (Use for Airstroke™ actuator design)

Assembly Height (mm)	Volume @ 7 BAR (cu cm)	EFF Area @ 7 BAR (cm sq)	kN Force @ 3 BAR	@ 4 BAR	@ 5 BAR	@6 BAR	@7 BAR
280	24758	541	14.81	20.52	26.07	32.28	37.85
240	22165	661	18.76	25.69	32.37	39.60	46.23
200	19084	758	21.74	29.70	37.34	45.53	53.06
160	15583	844	24.15	33.09	41.57	50.69	59.10
120	11862	906	25.90	35.57	44.61	54.37	63.44
80	8016	930	26.79	36.66	45.89	55.82	65.11

NOTE: All Assembly Order Numbers are for bead plate parts unless noted otherwise.

	Description	Assembly Order No.
Style 233-2 Two Ply Bellows	Blind nuts, 1/4 BSP	W01-M58-6107
	Blind nuts, 3/4 BSP	W01-M58-6109
Assembly weight.....8.89 kg.		
Force to collapse to minimum height (@ 0 BAR) 455 N.		

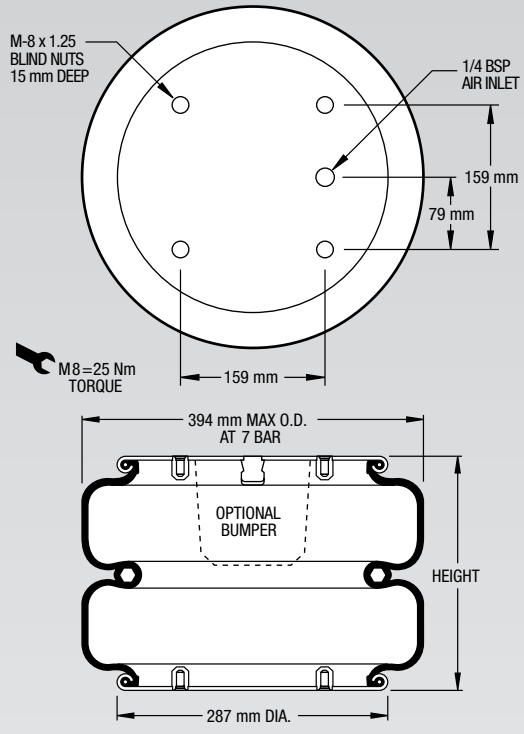

NOTE: The bellows extends beyond the bead plates at minimum height.

NOTE: A bead plate part is shown. This part is also available with bead rings. See pages 8-10 for explanation.

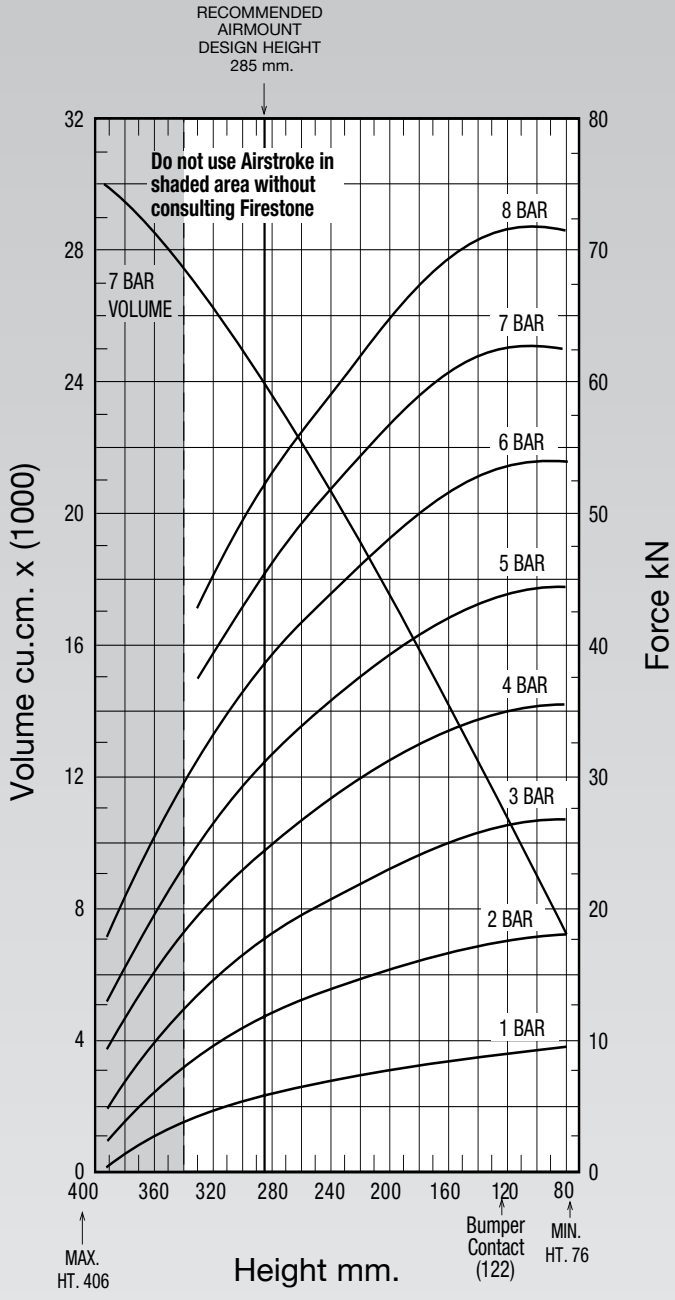

See page 12 for instructions on how to use chart.

Dynamic Characteristics at 285 mm Design Height
(Required for Airmount isolator design only)

Gauge Pressure (BAR)	Load (kN)	Spring Rate (kN/m)	Natural Frequency Hz
3	17.48	164	1.53
4	24.14	208	1.46
5	30.73	251	1.43
6	38.28	299	1.39
7	45.04	345	1.38

Force Table (Use for Airstroke™ actuator design)

Assembly Height (mm)	Volume @ 7 BAR (cu cm)	EFF Area @ 7 BAR (cm sq)	kN Force @ 3 BAR	@ 4 BAR	@ 5 BAR	@6 BAR	@7 BAR
320	26309	560	14.44	20.52	26.35	33.20	39.23
280	23714	653	17.82	24.56	31.24	38.87	45.73
240	20846	729	20.39	27.85	35.13	43.41	51.04
200	17673	799	22.69	30.81	38.73	47.65	55.94
160	14250	859	24.68	33.30	41.87	51.34	60.11
120	10748	892	25.94	34.86	43.76	53.44	62.41
80	6382	889	26.62	35.40	44.31	53.60	62.25

NOTE: All Assembly Order Numbers are for bead ring parts unless noted otherwise.

	Description	Assembly Order No.
Style 28 Two Ply Bellows	Ribbed neck aluminum bead rings (equal spacing), 45 mm bolts, nuts, washers	W01-M58-7531
	Rolled plate assembly, 1/2 blind nuts, 3/4 NPT	W01-358-7271
	Rubber bellows only	W01-358-7925
Assembly weight.....8.62 kg.		
Force to collapse to minimum height (@ 0 BAR) 169 N.		

Style 201 High Strength Con-struction	Ribbed neck aluminum bead rings (equal spacing), 50 mm bolts, nuts, washers	W01-358-7244
	Rubber bellows only	W01-358-0201

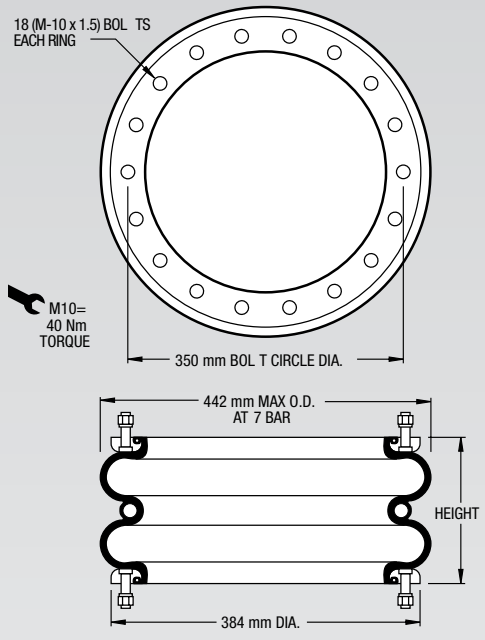

NOTE: A bead ring part is shown. This part is also available with rolled plates. See page 11 for explanation.

**Increase the minimum height by 18 mm. Add 18 mm to the height (bottom axis) before reading loads.*

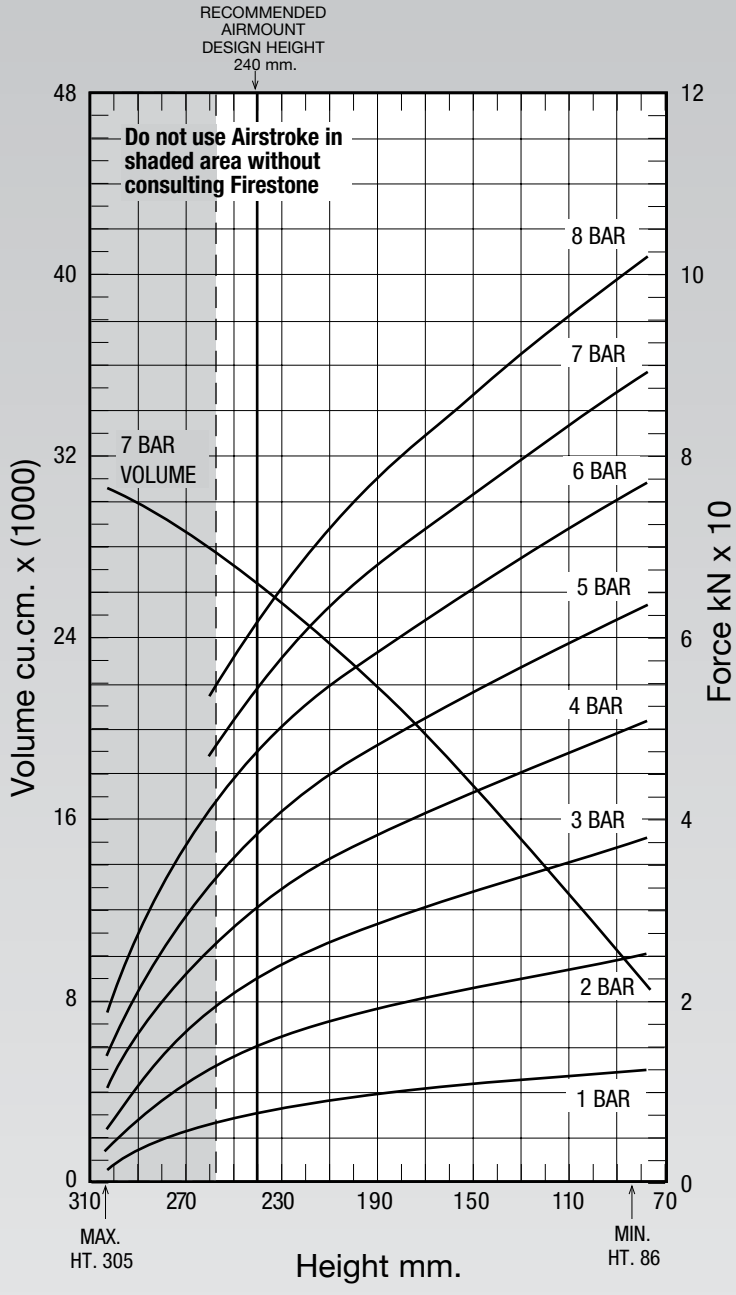

See page 12 for instructions on how to use chart.

Dynamic Characteristics at 240 mm Design Height
(Required for Airmount isolator design only)

Gauge Pressure (BAR)	Load (kN)	Spring Rate (kN/m)	Natural Frequency Hz
3	22.15	295	1.82
4	30.14	376	1.76
5	38.05	460	1.73
6	46.65	542	1.70
7	54.48	618	1.68

Force Table (Use for Airstroke™ actuator design)

Assembly Height (mm)	Volume @ 7 BAR (cu cm)	EFF Area @ 7 BAR (cm sq)	kN Force @ 3 BAR	@ 4 BAR	@ 5 BAR	@6 BAR	@7 BAR
240	26073	778	22.15	30.14	38.05	46.65	54.48
220	24364	868	25.13	33.95	42.75	52.16	60.76
200	22432	942	27.57	37.08	46.61	56.69	65.96
180	20346	1006	29.58	39.70	49.85	60.54	70.38
160	18120	1062	31.33	42.02	52.74	63.99	74.36
140	15772	1118	32.97	44.25	55.56	67.37	78.24
120	13395	1175	34.68	46.56	58.50	70.87	82.21
100	10932	1231	36.48	48.90	61.43	74.35	86.18

NOTE: All Assembly Order Numbers are for bead ring parts unless noted otherwise.

	Description	Assembly Order No.
Style 203 Two Ply Bellows	Ribbed neck aluminum bead rings (equal spacing), 45 mm bolts, nuts, washers	W01-M58-6985
	Rolled plate assembly, 1/2 blind nuts, 3/4 NPT	W01-358-7767
	Rubber bellows only	W01-358-0205
Assembly weight.....10.80 kg.		
Force to collapse to minimum height (@ 0 BAR) 178 N.		

Style 218 High Strength Con-struction	Ribbed neck aluminum bead rings (equal spacing), 45 mm bolts, nuts, washers	W01-M58-6986
	Rubber bellows only	W01-358-0219

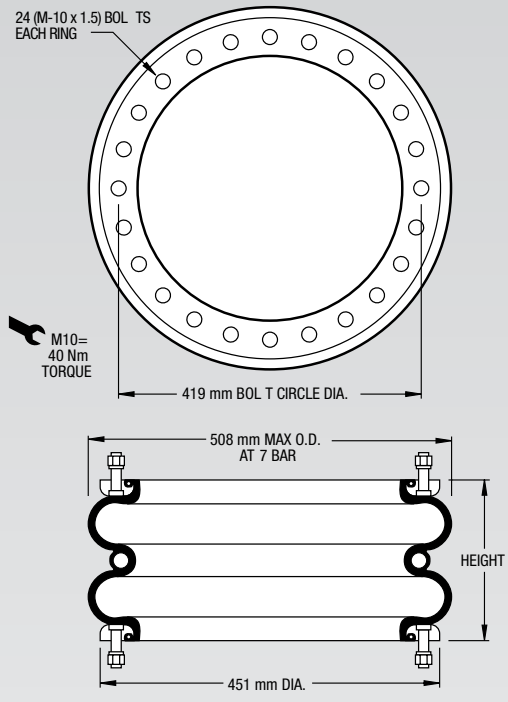

NOTE: A bead ring part is shown. This part is also available with rolled plates. See page 11 for explanation.

**Increase the minimum height by 18 mm. Add 18 mm to the height (bottom axis) before reading loads.*

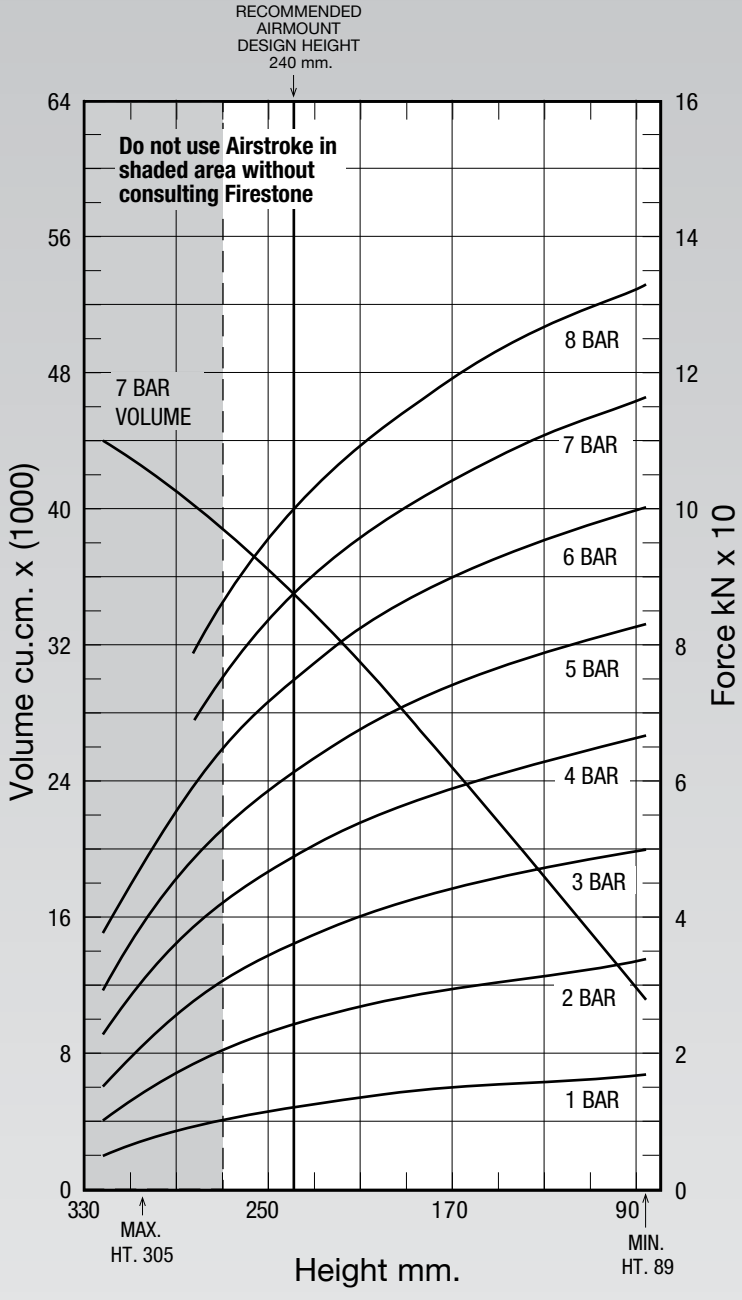

See page 12 for instructions on how to use chart.

Dynamic Characteristics at 240 mm Design Height
(Required for Airmount isolator design only)

Gauge Pressure (BAR)	Load (kN)	Spring Rate (kN/m)	Natural Frequency Hz
3	35.98	409	1.68
4	48.73	516	1.62
5	61.33	627	1.60
6	74.72	745	1.57
7	86.97	856	1.56

Force Table (Use for Airstroke™ actuator design)

Assembly Height (mm)	Volume @ 7 BAR (cu cm)	EFF Area @ 7 BAR (cm sq)	kN Force @ 3 BAR	@ 4 BAR	@ 5 BAR	@6 BAR	@7 BAR
260	37836	1132	32.38	44.21	55.77	68.08	79.26
240	35328	1243	35.98	48.73	61.33	74.72	86.97
220	32638	1331	38.91	52.40	65.84	80.08	93.18
200	29694	1404	41.34	55.43	69.58	84.51	98.30
180	26610	1467	43.38	57.99	72.78	88.32	102.65
160	23416	1520	45.15	60.21	75.56	91.62	106.42
140	20139	1567	46.72	62.20	77.99	94.46	109.68
120	16912	1607	48.13	64.04	80.11	96.86	112.48

NOTE: All Assembly Order Numbers are for bead ring parts unless noted otherwise.

	Description	Assembly Order No.
Style 29 Two Ply Bellows	Ribbed neck aluminum bead rings (equal spacing), 45 mm bolts, nuts, washers	W01-M58-7532
	Rolled plate assembly, 1/2 blind nuts, 3/4 BSP	W01-358-7275
	Rubber bellows only	W01-358-7902
Assembly weight.....13.06 kg.		
Force to collapse to minimum height (@ 0 BAR) 311 N.		

Style 207 High Strength Con-struction	Ribbed neck aluminum bead rings (equal spacing), 45 mm bolts, nuts, washers	W01-M58-6987
	Rubber bellows only	W01-358-0207

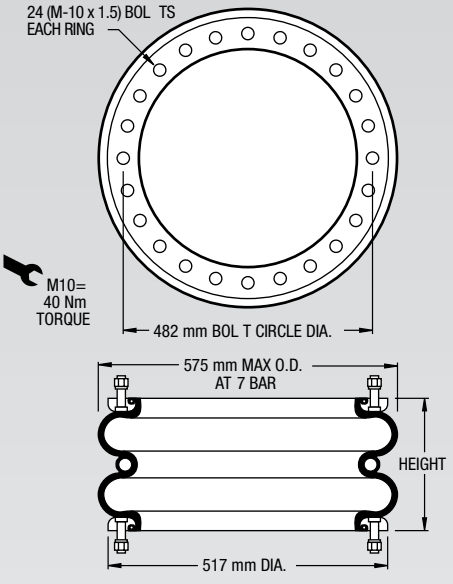

NOTE: A bead ring part is shown. This part is also available with rolled plates. See page 11 for explanation.

**Increase the minimum height by 18 mm. Add 18 mm to the height (bottom axis) before reading loads.*

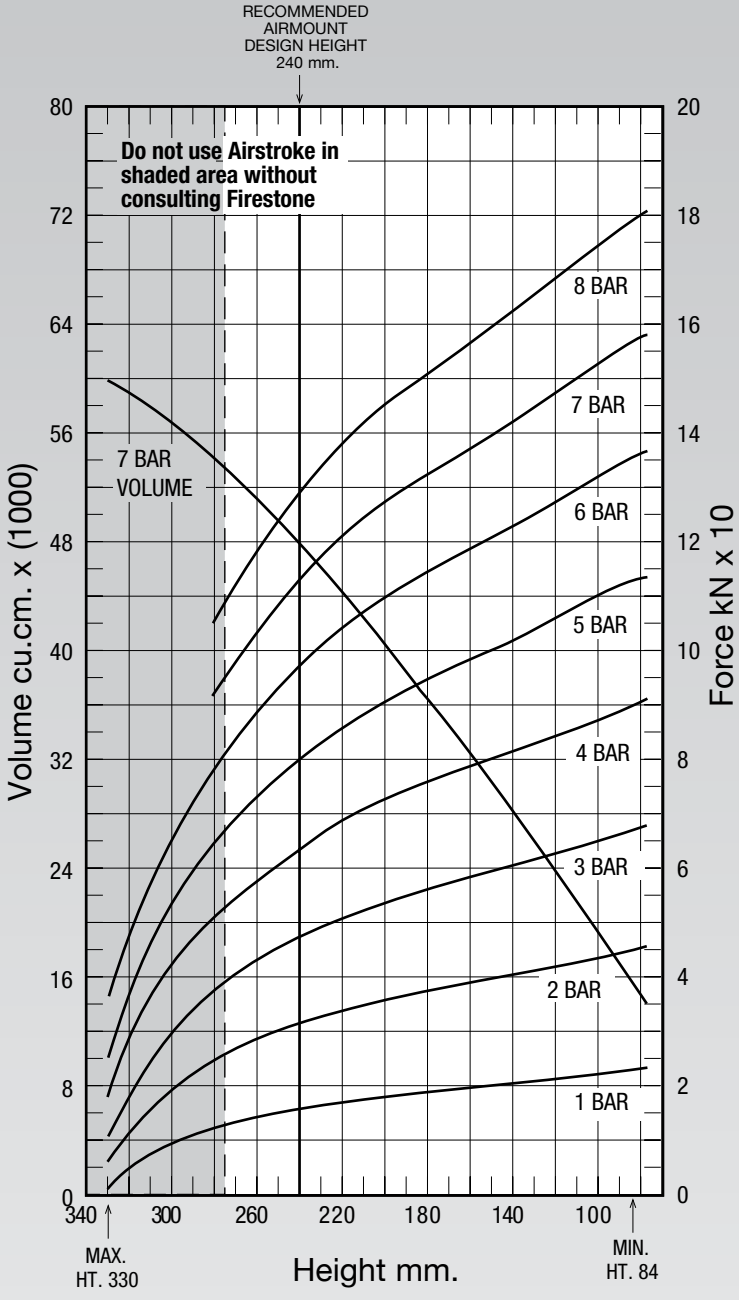

See page 12 for instructions on how to use chart.

Dynamic Characteristics at 240 mm Design Height
(Required for Airmount isolator design only)

Gauge Pressure (BAR)	Load (kN)	Spring Rate (kN/m)	Natural Frequency Hz
3	47.12	497	1.62
4	63.62	663	1.61
5	80.06	795	1.57
6	97.40	923	1.54
7	113.25	1050	1.52

Force Table (Use for Airstroke™ actuator design)

Assembly Height (mm)	Volume @ 7 BAR (cu cm)	EFF Area @ 7 BAR (cm sq)	kN Force @ 3 BAR	@ 4 BAR	@ 5 BAR	@6 BAR	@7 BAR
280	53863	1317	37.03	50.72	64.11	78.82	92.17
240	47704	1618	47.12	63.62	80.06	97.40	113.25
200	40443	1814	53.26	72.74	90.77	109.45	127.00
160	32306	1962	57.95	78.61	98.18	118.39	137.31
120	23824	2110	62.84	84.57	105.81	127.52	147.69
80	15280	2255	67.74	90.95	113.48	136.38	157.84

NOTE: All Assembly Order Numbers are for bead ring parts unless noted otherwise.

	Description	Assembly Order No.
Style 200	Ribbed neck aluminum bead rings (equal spacing), 45 mm bolts, nuts, washers	W01-M58-6979
Two Ply Bellows	Rubber bellows only	W01-358-5126
Assembly weight.....15.83 kg.		
Force to collapse to minimum height (@ 0 BAR) 445 N.		

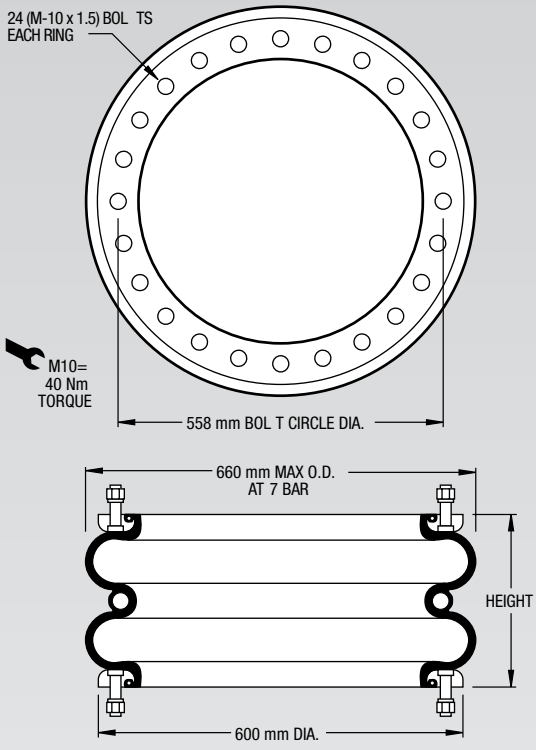

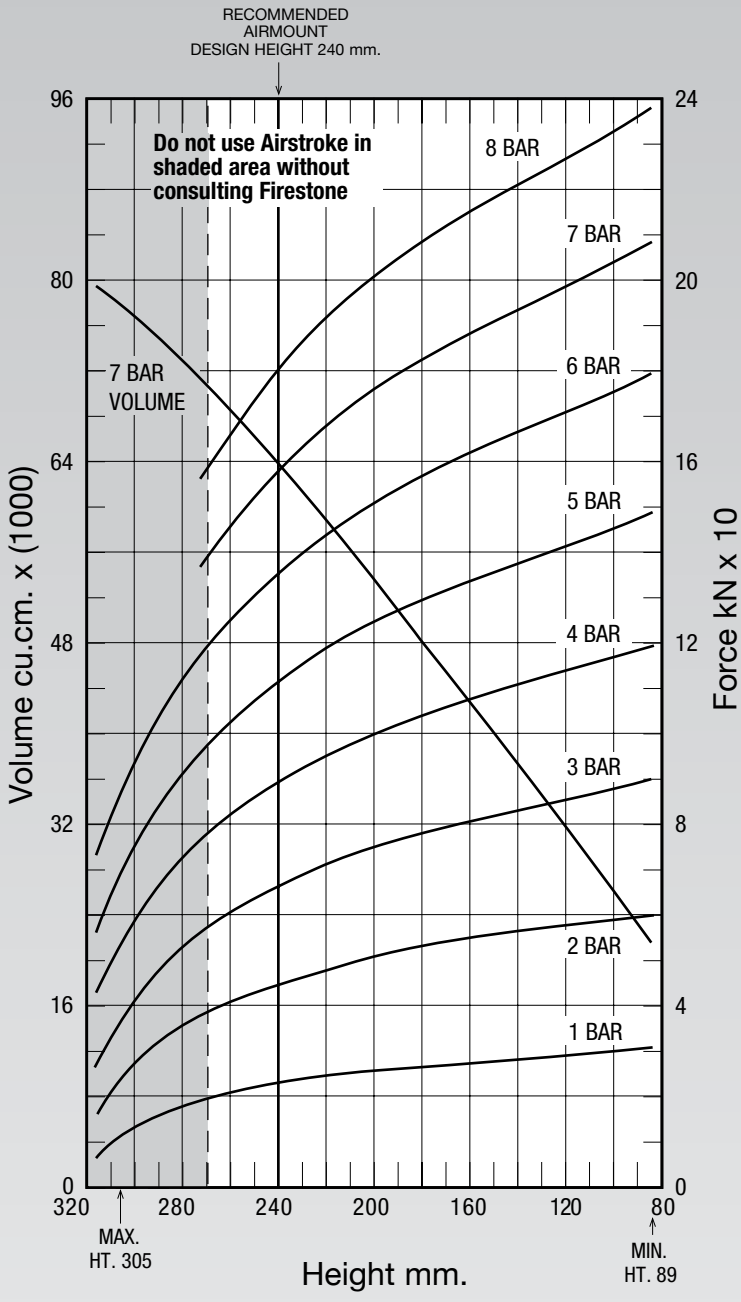

See page 12 for instructions on how to use chart.

Dynamic Characteristics at 240 mm Design Height
(Required for Airmount isolator design only)

Gauge Pressure (BAR)	Load (kN)	Spring Rate (kN/m)	Natural Frequency Hz
3	65.60	710	1.64
4	88.20	903	1.60
5	110.53	1091	1.57
6	134.38	1290	1.54
7	156.56	1480	1.53

Force Table (Use for Airstroke™ actuator design)

Assembly Height (mm)	Volume @ 7 BAR (cu cm)	EFF Area @ 7 BAR (cm sq)	kN Force @ 3 BAR	@ 4 BAR	@ 5 BAR	@6 BAR	@7 BAR
260	68626	2057	59.56	80.57	101.22	123.62	143.98
240	64100	2237	65.60	88.20	110.53	134.38	156.56
220	59270	2384	70.27	94.34	117.99	143.23	166.86
200	54018	2503	74.03	99.30	124.00	150.38	175.20
180	48552	2599	77.11	103.27	128.85	156.12	181.87
160	42927	2678	79.74	106.59	132.92	160.96	187.47
140	37197	2754	82.19	109.71	136.77	165.54	192.76
120	31597	2835	84.73	113.02	140.90	170.45	198.42

NOTE: Replacement for Style 211

215 Firestone AIRSTROKE ACTUATORS AIRMOUNT ISOLATORS

NOTE: All Assembly Order Numbers are for bead ring parts unless noted otherwise.

	Description	Assembly Order No.
Style 215	Ribbed neck aluminum bead rings (equal spacing), 45 mm bolts, nuts, washers	W01-M58-6978
High Strength Con-struction	Rubber bellows only	W01-358-7912
Assembly weight.....17.42 kg.		
Force to collapse to minimum height (@ 0 BAR) 712 N.		

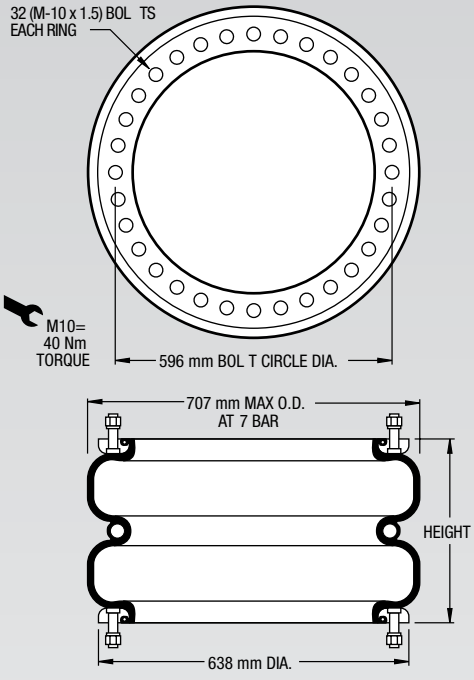

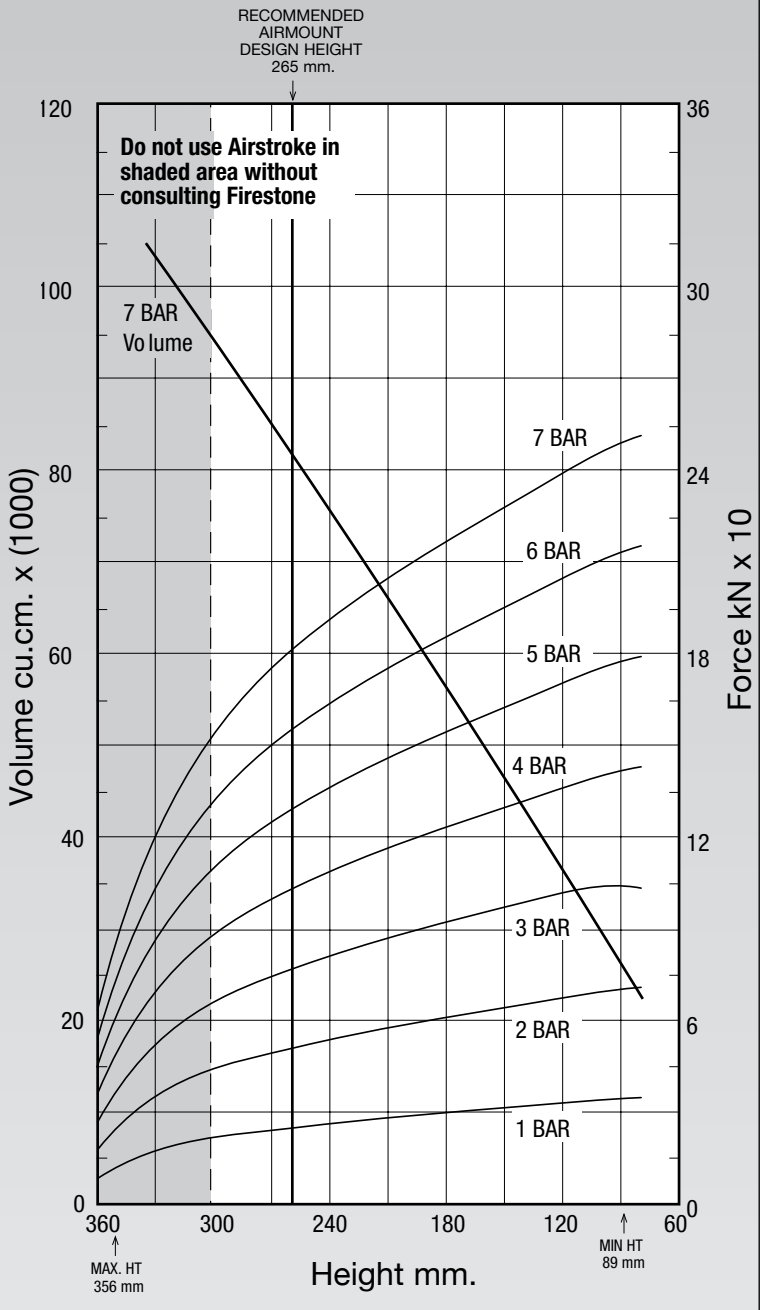

See page 12 for instructions on how to use chart.

Dynamic Characteristics at 265 mm Design Height
(Required for Airmount isolator design only)

Gauge Pressure (BAR)	Load (kN)	Spring Rate (kN/m)	Natural Frequency Hz
3	75.98	710	1.52
4	103.39	879	1.45
5	130.16	1077	1.43
6	158.58	1277	1.42
7	184.57	1458	1.40

Force Table (Use for Airstroke™ actuator design)

Assembly Height (mm)	Volume @ 7 BAR (cu cm)	EFF Area @ 7 BAR (cm sq)	kN Force @ 3 BAR	@ 4 BAR	@ 5 BAR	@6 BAR	@7 BAR
280	87025	2517	71.76	98.42	123.96	151.24	176.18
240	76206	2804	81.69	110.16	138.72	168.82	196.27
200	64214	3026	88.70	119.39	150.17	182.38	211.83
160	51165	3225	94.30	127.88	160.34	194.31	225.73
120	37635	3424	100.33	135.61	169.95	206.11	239.66
80	23815	3558	105.77	141.44	177.04	214.33	249.02

NOTE: All Assembly Order Numbers are for bead ring parts unless noted otherwise.

	Description	Assembly Order No.
Style 248-2 High Strength Con-struction	Ribbed neck aluminum bead rings (equal spacing), 45 mm bolts, nuts, washers	W01-M58-6970
	Rubber bellows only	W01-358-1022
Assembly weight.....32.88 kg.		
Force to collapse to minimum height (@ 0 BAR) 1556 N.		

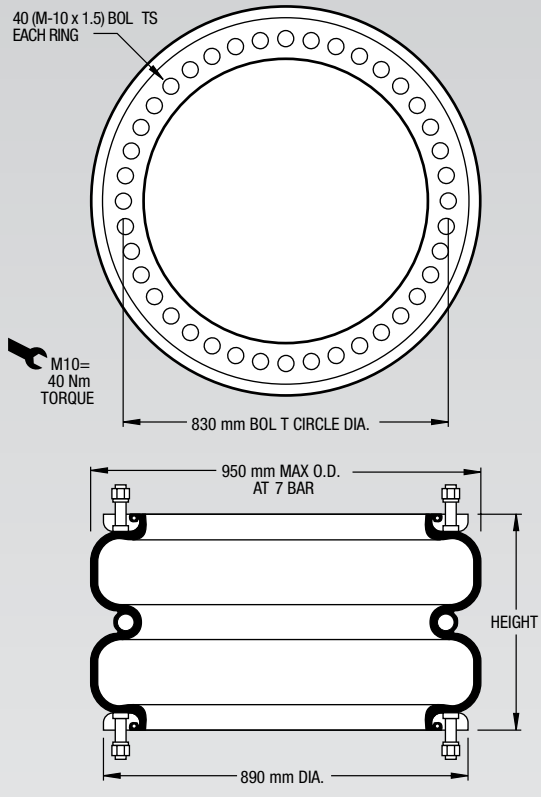

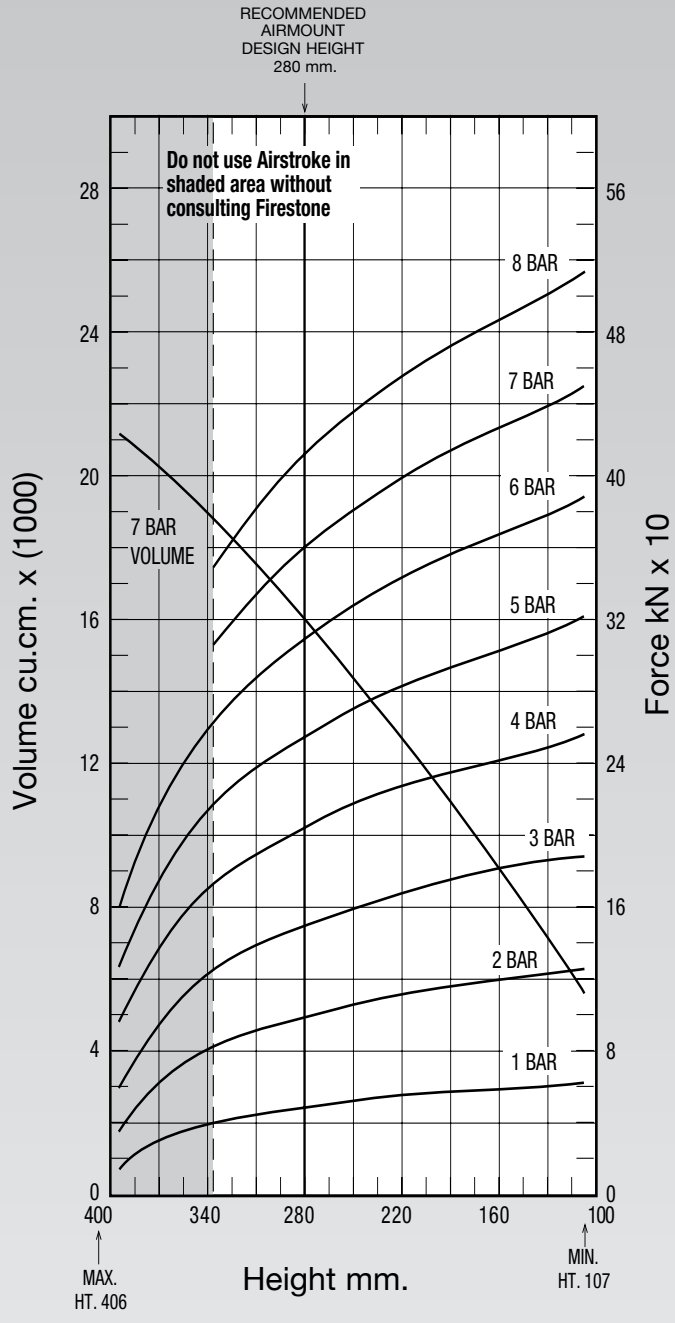

NOTE: The effective length of the 45 mm bolt is 30 mm in this bead ring.

See page 12 for instructions on how to use chart.

Dynamic Characteristics at 280 mm Design Height
(Required for Airmount isolator design only)

Gauge Pressure (BAR)	Load (kN)	Spring Rate (kN/m)	Natural Frequency Hz
3	150.00	1245	1.44
4	204.75	1600	1.39
5	255.83	1923	1.37
6	309.73	2281	1.35
7	360.26	2628	1.35

Force Table (Use for Airstroke™ actuator design)

Assembly Height (mm)	Volume @ 7 BAR (cu cm)	EFF Area @ 7 BAR (cm sq)	kN Force @ 3 BAR	@ 4 BAR	@ 5 BAR	@6 BAR	@7 BAR
320	180105	4643	133.77	183.62	230.28	279.45	324.96
280	160037	5147	150.00	204.75	255.83	309.73	360.26
240	138633	5549	162.94	220.93	275.60	333.61	388.39
200	115452	5858	174.20	233.51	291.87	352.93	410.04
160	90693	6106	182.57	242.51	304.68	368.72	427.34
120	65396	6367	188.40	252.37	317.21	384.29	445.66

NOTE: All Assembly Order Numbers are for bead plate parts unless noted otherwise.

	Description	Assembly Order No.
Style 352 Two Ply Bellows	Blind nuts, 1/4 BSP	W01-M58-6129
	Blind nuts, 3/4 BSP	W01-M58-6128
Assembly weight.....8.84 kg.		
Force to collapse to minimum height (@ 0 BAR) 900 N.		

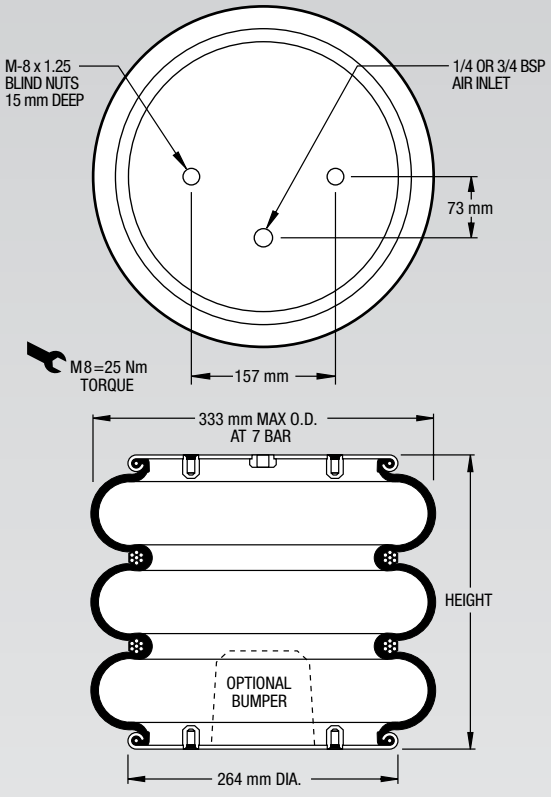

NOTE: A bead plate part is shown. This part is also available with bead rings. See pages 8-10 for explanation.

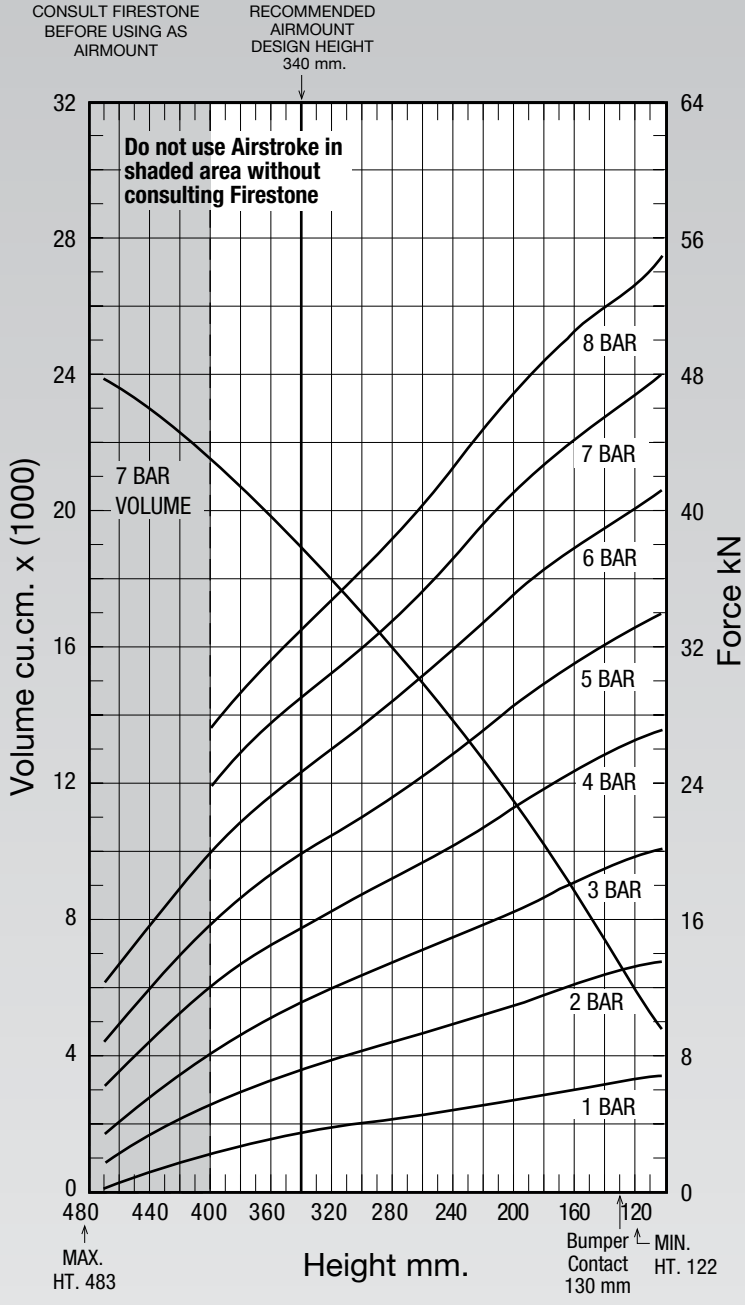

See page 12 for instructions on how to use chart.

Dynamic Characteristics at 340 mm Design Height
(Required for Airmount isolator design only)

Gauge Pressure (BAR)	Load (kN)	Spring Rate (kN/m)	Natural Frequency Hz
3	11.29	94	1.44
4	15.70	115	1.35
5	20.02	140	1.32
6	24.85	165	1.28
7	29.14	188	1.27

Force Table (Use for Airstroke™ actuator design)

Assembly Height (mm)	Volume @ 7 BAR (cu cm)	EFF Area @ 7 BAR (cm sq)	kN Force @ 3 BAR	@ 4 BAR	@ 5 BAR	@6 BAR	@7 BAR
380	20777	370	9.42	13.56	17.44	21.95	25.89
340	19038	416	11.29	15.70	20.02	24.85	29.14
300	17069	459	12.88	17.53	22.29	27.49	32.13
260	14972	508	14.35	19.46	24.70	30.43	35.55
220	12695	563	15.87	21.65	27.37	33.68	39.40
180	10161	614	17.50	23.87	30.03	36.76	42.96
140	7445	652	19.13	25.76	32.28	39.20	45.65

NOTE: All Assembly Order Numbers are for bead plate parts unless noted otherwise.

	Description	Assembly Order No.
Style 313 Two Ply Bellows	Blind nuts, 1/4 BSP	W01-M58-6120
	Blind nuts, 1/4 BSP, bumper	W01-M58-6121
	Blind nuts, 3/4 BSP	W01-M58-6122
	Countersunk steel bead rings, 40 mm bolts, nuts, washers	W01-M58-7526
	Rubber bellows only	W01-358-7900
Assembly weight.....8.84 kg.		
Force to collapse to minimum height (@ 0 BAR) 205 N.		

Style 39 High Strength Bellows	Blind nuts, 3/4 BSP	W01-M58-6130
	Countersunk steel bead rings, 40 mm bolts, nuts, washers	W01-M58-7534

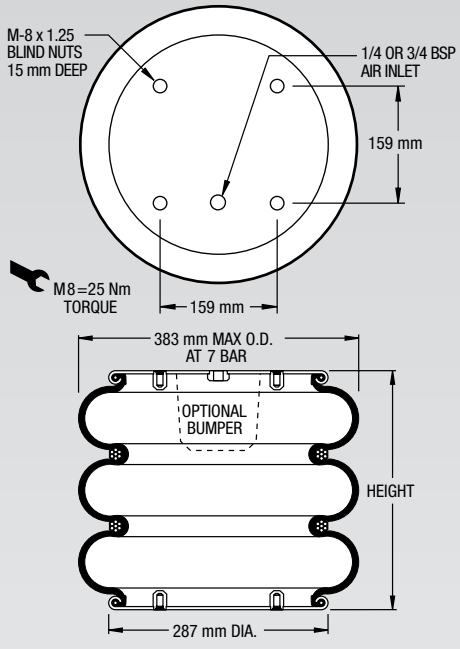

NOTE: This part is also available with bead rings (rather than bead plates.) SEE PAGE 8.

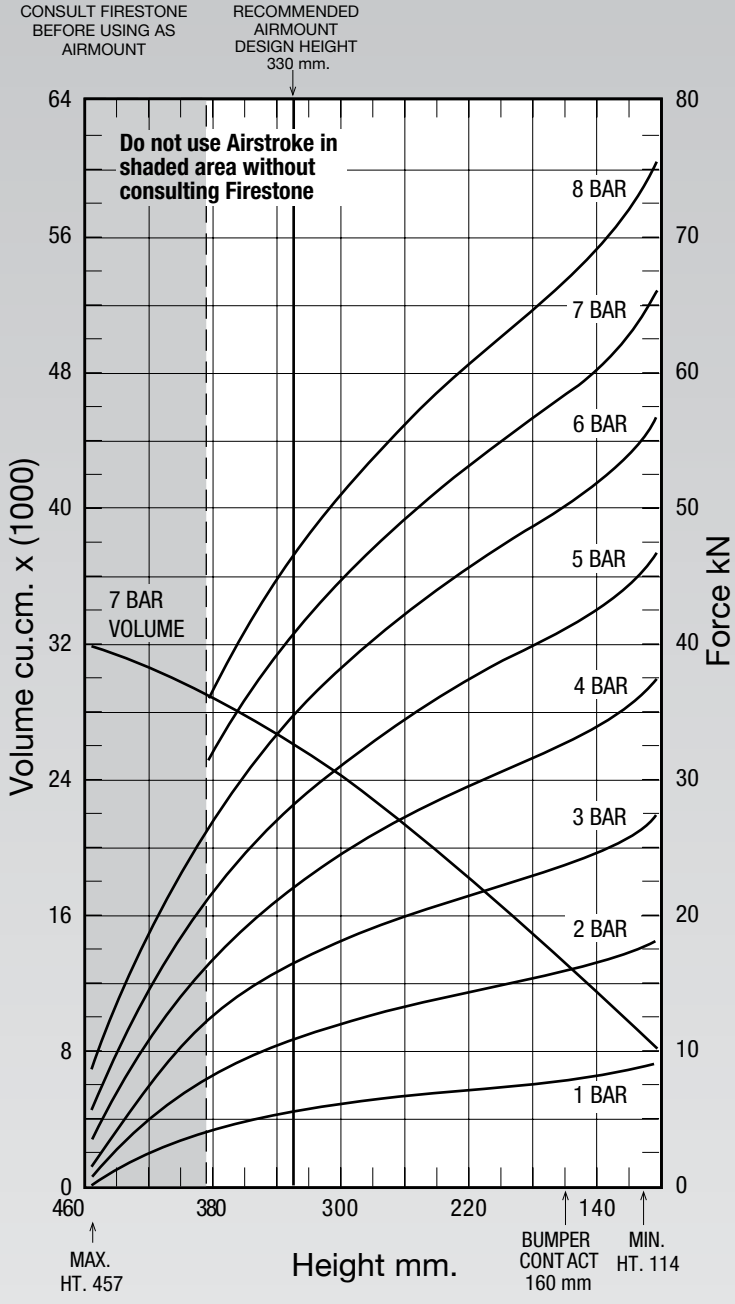

See page 12 for instructions on how to use chart.

Dynamic Characteristics at 330 mm Design Height
(Required for Airmount isolator design only)

Gauge Pressure (BAR)	Load (kN)	Spring Rate (kN/m)	Natural Frequency Hz
3	16.03	137	1.46
4	21.87	177	1.42
5	27.79	216	1.39
6	34.37	258	1.37
7	40.27	296	1.35

Force Table (Use for Airstroke™ actuator design)

Assembly Height (mm)	Volume @ 7 BAR (cu cm)	EFF Area @ 7 BAR (cm sq)	kN Force @ 3 BAR	@ 4 BAR	@ 5 BAR	@6 BAR	@7 BAR
360	27730	507	13.81	18.98	24.25	30.20	35.45
320	25348	595	16.66	22.70	28.81	35.57	41.64
280	22676	666	18.89	25.65	32.47	39.90	46.59
240	19773	726	20.71	28.15	35.61	43.60	50.79
200	16583	778	22.22	30.33	38.33	46.80	54.44
160	13143	827	23.59	32.39	40.82	49.74	57.85
120	9602	890	25.58	35.07	44.05	53.55	62.29

NOTE: All Assembly Order Numbers are for bead plate parts unless noted otherwise.

	Description	Assembly Order No.
Style 333 Two Ply Bellows	Blind nuts, 1/4 BSP	W01-M58-6136
	Blind nuts, 1/4 BSP, rubber bumper	W01-M58-6138
	Blind nuts, 3/4 BSP	W01-M58-6137
	Countersunk steel bead rings, 40 mm bolts, nuts, washers	W01-M58-7535
	Rubber bellows only	W01-358-7019
Assembly weight.....11.16 kg.		
Force to collapse to minimum height (@ 0 BAR) 289 N.		

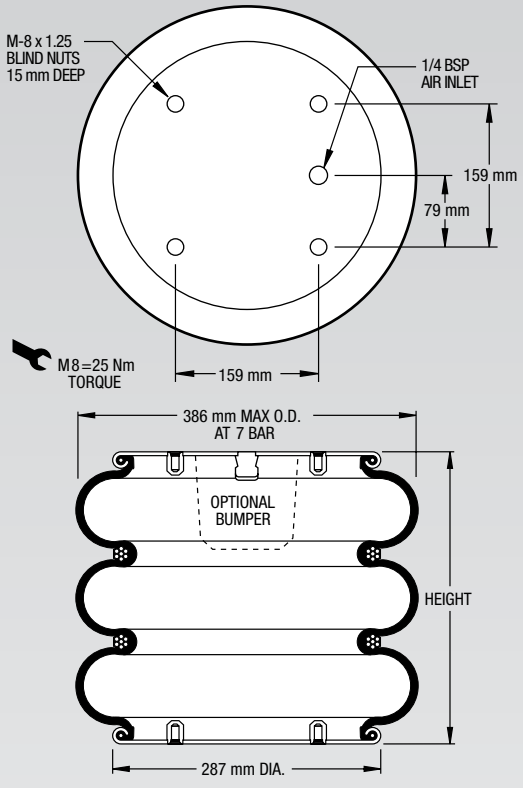

NOTE: A bead plate part is shown. This part is also available with bead rings. See pages 8-10 for explanation.

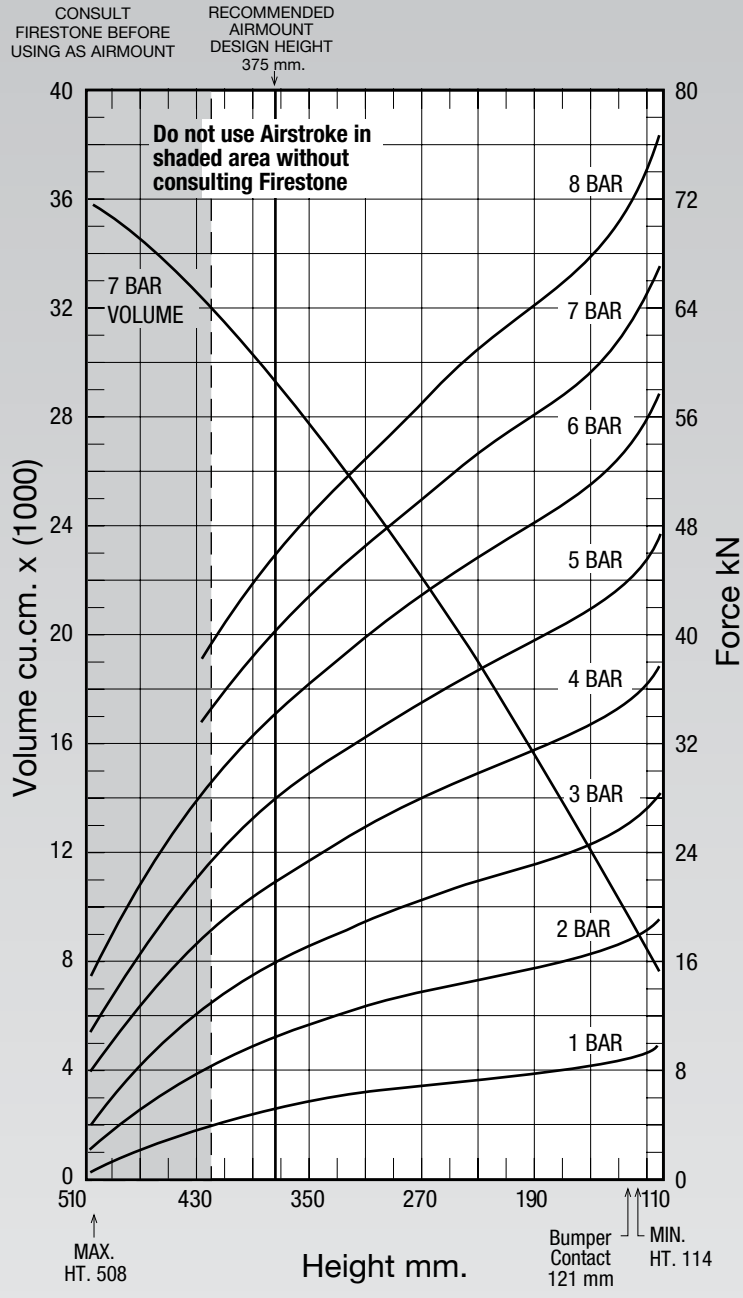

See page 12 for instructions on how to use chart.

Dynamic Characteristics at 375 mm Design Height
(Required for Airmount isolator design only)

Gauge Pressure (BAR)	Load (kN)	Spring Rate (kN/m)	Natural Frequency Hz
3	15.75	115	1.35
4	21.81	148	1.30
5	27.65	179	1.27
6	34.16	210	1.24
7	40.04	239	1.22

Force Table (Use for Airstroke™ actuator design)

Assembly Height (mm)	Volume @ 7 BAR (cu cm)	EFF Area @ 7 BAR (cm sq)	kN Force @ 3 BAR	@ 4 BAR	@ 5 BAR	@6 BAR	@7 BAR
420	31923	492	12.82	18.18	23.24	29.16	34.43
380	29684	565	15.48	21.47	27.24	33.69	39.51
340	27147	623	17.53	24.08	30.38	37.29	43.60
300	24321	676	19.30	26.37	33.16	40.53	47.32
260	21367	727	20.90	28.46	35.74	43.60	50.87
220	18224	773	22.32	30.31	38.06	46.41	54.12
180	14802	815	23.58	31.93	40.12	48.91	57.03
140	11225	864	25.14	33.87	42.56	51.89	60.49

NOTE: All Assembly Order Numbers are for bead ring parts unless noted otherwise.

	Description	Assembly Order No.
Style 312	Ribbed neck aluminum bead rings (equal spacing), 45 mm bolts, nuts, washers	W01-M58-7530
Two Ply Bellows	Rolled plate assembly, 1/2 blind nuts, 3/4 NPT	W01-358-7286
	Rubber bellows only	W01-358-7914
Assembly weight.....11.25 kg.		
Force to collapse to minimum height (@ 0 BAR) 600 N.		

Style 314	Aluminum ribbed neck bead rings (equal spacing), 45 mm bolts, nuts, washers	W01-M58-6981
High Strength Con-struction	Rolled plate assembly, 1/2 blind nuts, 3/4 NPT	W01-358-8009
	Rubber bellows only	W01-358-7926

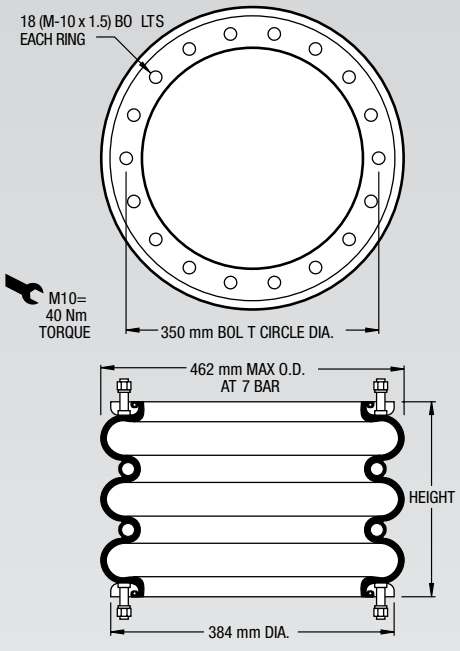

NOTE: A bead ring part is shown. This part is also available with rolled plates. See page 11 for explanation.

**Increase the minimum height by 18 mm. Add 18 mm to the height (bottom axis) before reading loads.*

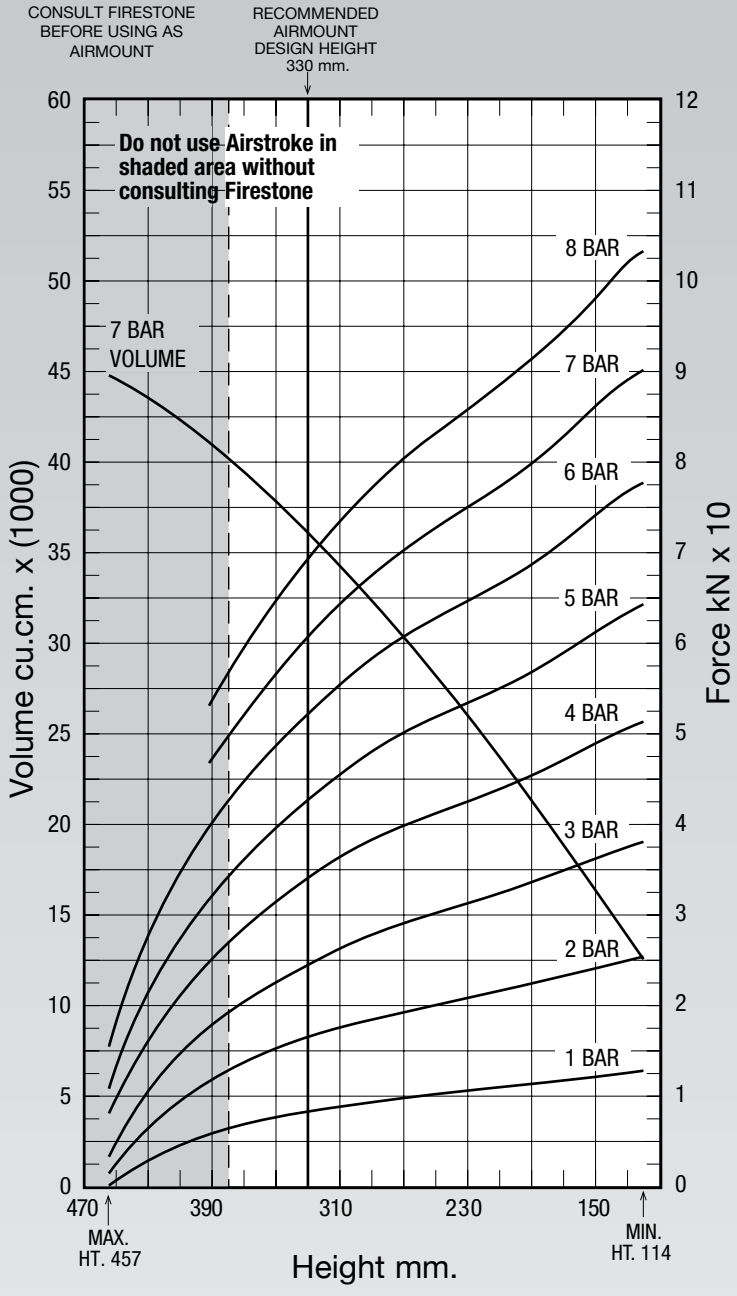

See page 12 for instructions on how to use chart.

Dynamic Characteristics at 330 mm Design Height
(Required for Airmount isolator design only)

Gauge Pressure (BAR)	Load (kN)	Spring Rate (kN/m)	Natural Frequency Hz
3	24.56	204	1.44
4	33.97	270	1.40
5	42.68	328	1.38
6	51.90	385	1.36
7	60.40	438	1.34

Force Table (Use for Airstroke™ actuator design)

Assembly Height (mm)	Volume @ 7 BAR (cu cm)	EFF Area @ 7 BAR (cm sq)	kN Force @ 3 BAR	@ 4 BAR	@ 5 BAR	@6 BAR	@7 BAR
360	38788	772	21.55	29.90	37.73	46.24	54.00
320	35273	890	25.42	35.13	44.10	53.57	62.30
280	31368	984	28.40	39.00	48.94	59.32	68.90
240	27154	1056	30.78	41.90	52.50	63.61	73.91
200	22558	1123	33.01	44.63	55.85	67.62	78.58
160	17629	1207	35.55	47.98	60.10	72.74	84.47
120	8017	1290	38.09	51.39	64.29	77.75	90.31

NOTE: All Assembly Order Numbers are for bead ring parts unless noted otherwise.

	Description	Assembly Order No.
Style 323 Two Ply Bellows	Ribbed neck aluminum bead rings (equal spacing), 45 mm bolts, nuts, washers	W01-M58-6980
	Rolled plate assembly, 1/2 blind nuts, 3/4 NPT	W01-358-7274
	Rubber bellows only	W01-358-7921
Assembly weight.....14.11 kg.		
Force to collapse to minimum height (@ 0 BAR) 311 N.		

Style 324 High Strength Con-struction	Ribbed neck aluminum bead rings (equal spacing), 45 mm bolts, nuts, washers	W01-M58-6968
	Rubber bellows only	W01-358-0324

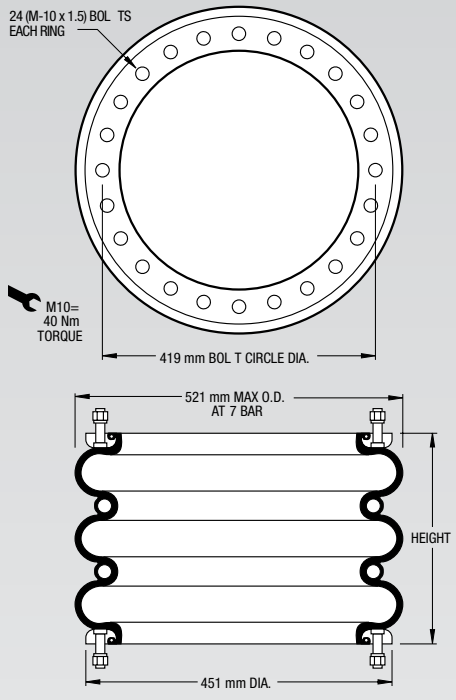

NOTE: A bead ring part is shown. This part is also available with rolled plates. See page 11 for explanation.

**Increase the minimum height by 18 mm. Add 18 mm to the height (bottom axis) before reading loads.*

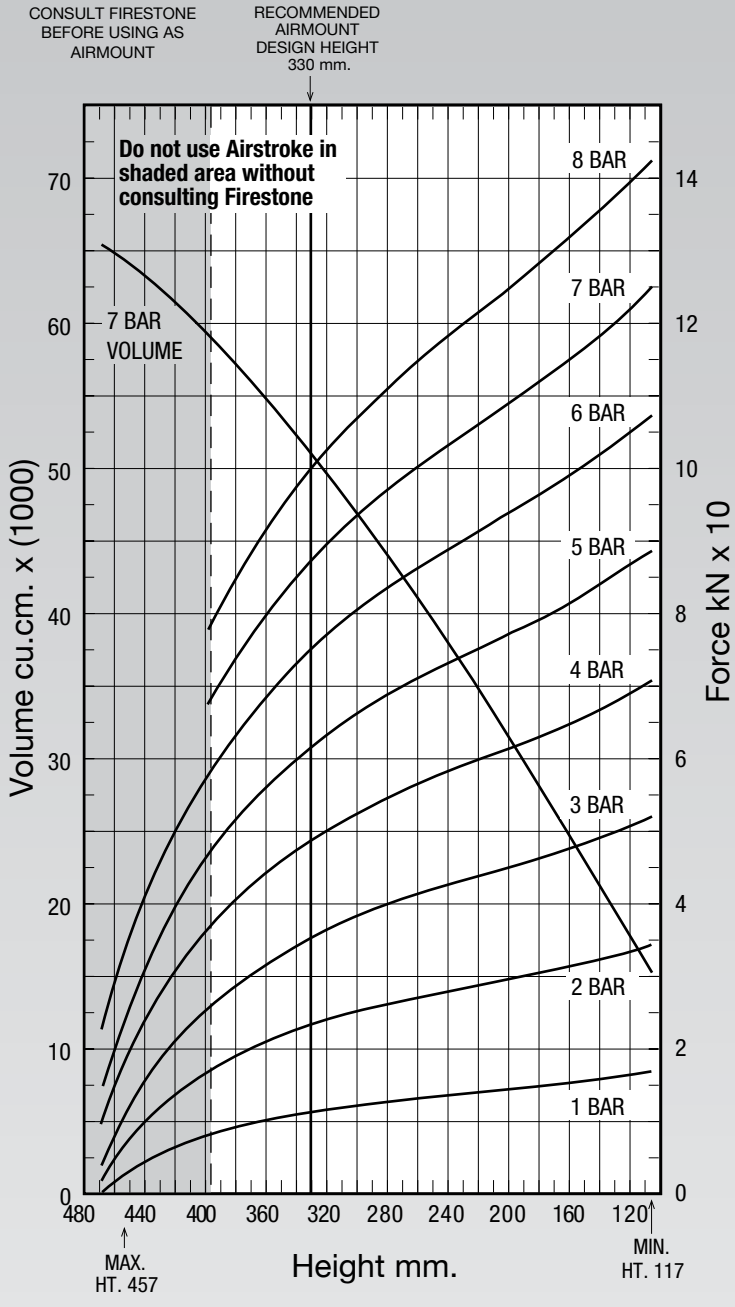

See page 12 for instructions on how to use chart.

Dynamic Characteristics at 330 mm Design Height
(Required for Airmount isolator design only)

Gauge Pressure (BAR)	Load (kN)	Spring Rate (kN/m)	Natural Frequency Hz
3	35.44	282	1.41
4	48.94	359	1.35
5	61.63	439	1.33
6	75.25	519	1.31
7	87.73	591	1.29

Force Table (Use for Airstroke™ actuator design)

Assembly Height (mm)	Volume @ 7 BAR (cu cm)	EFF Area @ 7 BAR (cm sq)	kN Force @ 3 BAR	@ 4 BAR	@ 5 BAR	@6 BAR	@7 BAR
390	58273	1014	27.34	38.66	49.98	60.53	70.98
350	53588	1185	33.11	46.04	58.01	71.01	82.92
310	48222	1314	37.50	51.49	64.81	79.00	91.98
270	42438	1416	40.88	55.72	70.14	85.30	99.14
230	36340	1503	43.49	59.18	74.48	90.52	105.18
190	29824	1585	45.86	62.40	78.51	95.46	110.96
150	22961	1676	48.67	66.06	83.04	100.93	117.33

NOTE: All Assembly Order Numbers are for bead ring parts unless noted otherwise.

	Description	Assembly Order No.
Style 320 Two Ply Bellows	Ribbed neck aluminum bead rings (equal spacing), 45 mm bolts, nuts, washers	W01-M58-6983
	Rolled plate assembly, 1/2 blind nuts, 3/4 NPT	W01-358-0987
	Rubber bellows only	W01-358-7276
Assembly weight.....16.47 kg.		
Force to collapse to minimum height (@ 0 BAR) 400 N.		

Style 328 High Strength Con-struction	Ribbed neck aluminum bead rings (equal spacing), 45 mm bolts, nuts, washers	W01-M58-6967
	Rubber bellows only	W01-358-1002

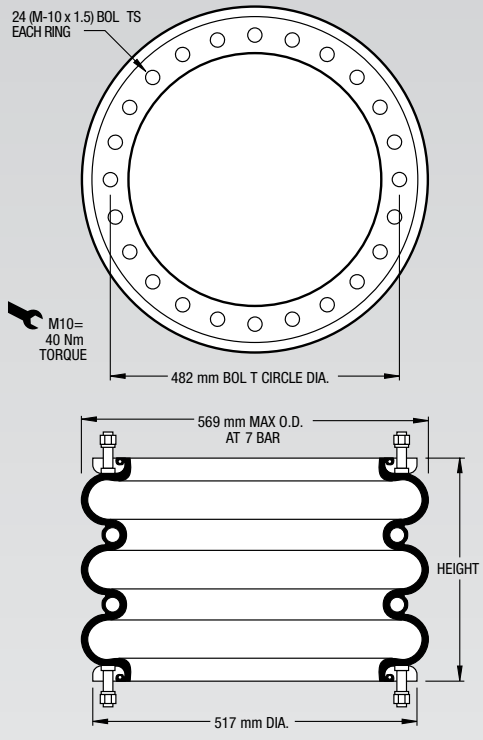

NOTE: A bead ring part is shown. This part is also available with rolled plates. See page 11 for explanation.

**Increase the minimum height by 18 mm. Add 18 mm to the height (bottom axis) before reading loads.*

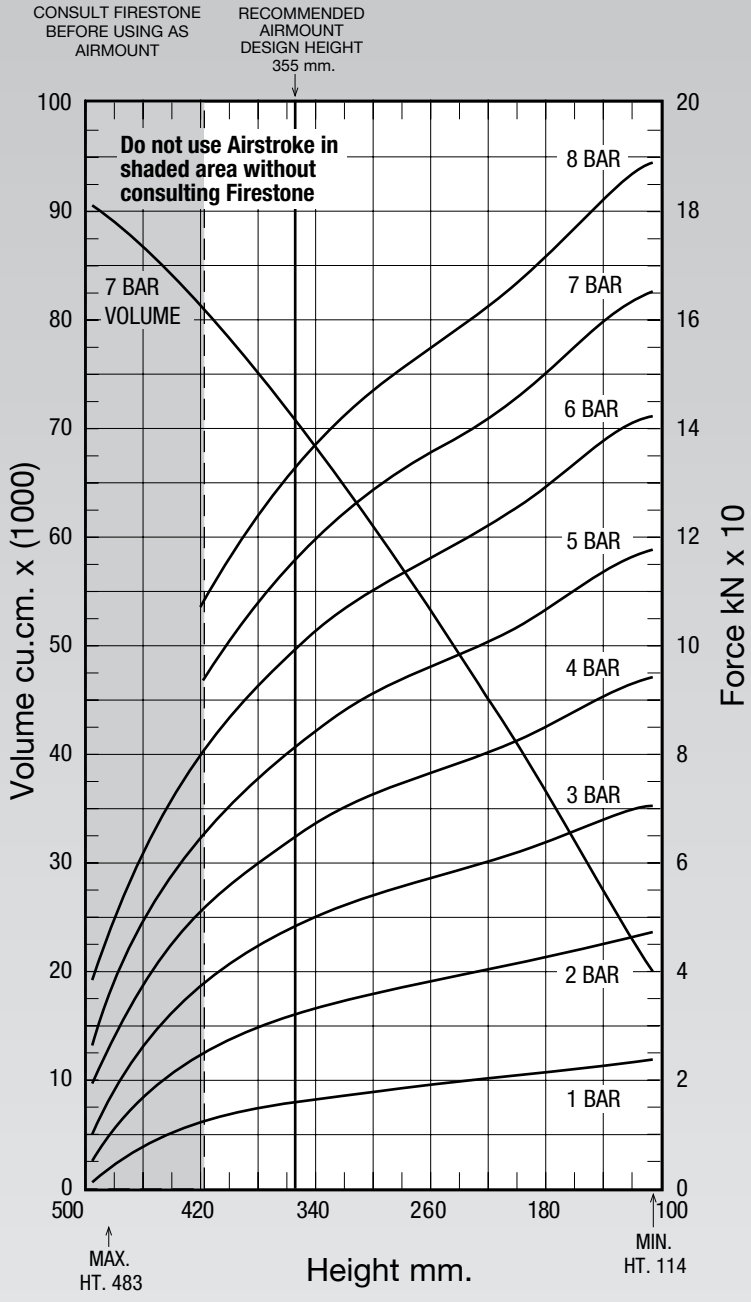

See page 12 for instructions on how to use chart.

Dynamic Characteristics at 355 mm Design Height
(Required for Airmount isolator design only)

Gauge Pressure (BAR)	Load (kN)	Spring Rate (kN/m)	Natural Frequency Hz
3	48.24	346	1.34
4	64.83	443	1.30
5	81.41	537	1.28
6	99.02	630	1.26
7	115.27	717	1.24

Force Table (Use for Airstroke™ actuator design)

Assembly Height (mm)	Volume @ 7 BAR (cu cm)	EFF Area @ 7 BAR (cm sq)	kN Force @ 3 BAR	@ 4 BAR	@ 5 BAR	@6 BAR	@7 BAR
390	76680	1494	43.07	58.16	73.24	89.57	104.53
350	70136	1667	48.89	65.68	82.46	100.23	116.64
310	62881	1800	53.25	71.41	89.51	108.46	126.01
270	55222	1905	56.54	75.68	94.82	114.81	133.36
230	47253	2001	59.44	79.34	99.42	120.50	140.03
190	38794	2109	62.84	83.60	104.80	127.04	147.64
150	29903	2239	67.09	89.06	111.57	135.01	156.73

NOTE: All Assembly Order Numbers are for bead ring parts unless noted otherwise.

	Description	Assembly Order No.
Style 321	Aluminum ribbed neck bead rings (equal spacing), 45 mm bolts, nuts, washers	W01-M58-6984
High Strength Con-struction	Rubber bellows only	W01-358-7919
Assembly weight.....23.2 kg.		
Force to collapse to minimum height (@ 0 BAR) 800 N.		

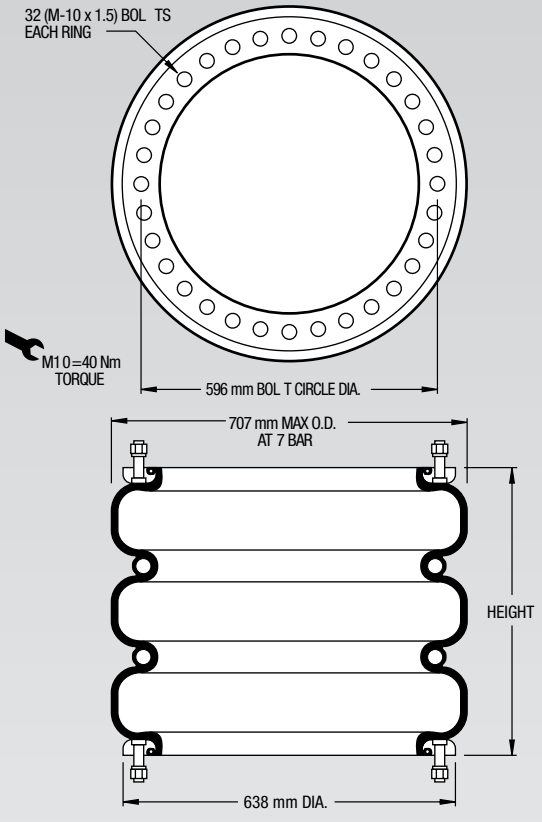

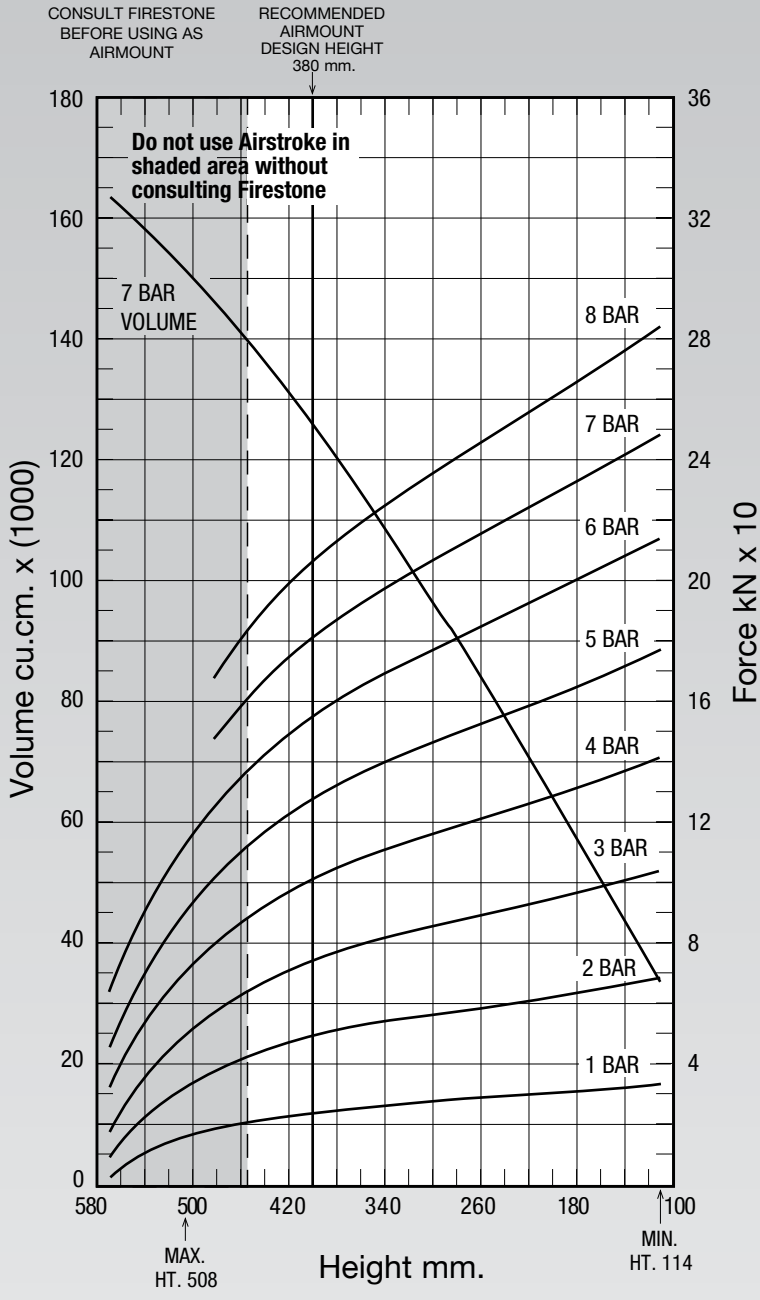

See page 12 for instructions on how to use chart.

Dynamic Characteristics at 380 mm Design Height
(Required for Airmount isolator design only)

Gauge Pressure (BAR)	Load (kN)	Spring Rate (kN/m)	Natural Frequency Hz
3	77.48	465	1.22
4	104.95	592	1.18
5	132.00	716	1.16
6	160.98	839	1.14
7	187.60	954	1.12

Force Table (Use for Airstroke™ actuator design)

Assembly Height (mm)	Volume @ 7 BAR (cu cm)	EFF Area @ 7 BAR (cm sq.)	kN Force @ 3 BAR	@ 4 BAR	@ 5 BAR	@6 BAR	@7 BAR
440	135784	2394	67.39	92.19	116.52	143.26	167.54
400	125615	2596	74.50	101.14	127.36	155.70	181.66
360	114722	2757	80.12	108.37	136.16	165.72	192.94
320	102796	2897	84.65	114.48	143.61	174.35	202.76
280	90465	3026	88.33	119.71	150.09	182.12	211.80
240	77839	3151	91.63	124.49	156.08	189.54	220.56
200	64589	3277	95.16	129.35	162.19	197.05	229.36
160	50778	3407	99.35	134.85	168.98	204.99	238.43

NOTE: All Assembly Order Numbers are for bead ring parts unless noted otherwise.

	Description	Assembly Order No.
Style 348-3 High Strength Construction	Ribbed neck aluminum bead rings (equal spacing), 45 mm bolts, nuts, washers	W01-M58-6971
	Rubber bellows only	W01-358-1023
Assembly weight.....47.13 kg.		
Force to collapse to minimum height (@ 0 BAR).....1690 N.		

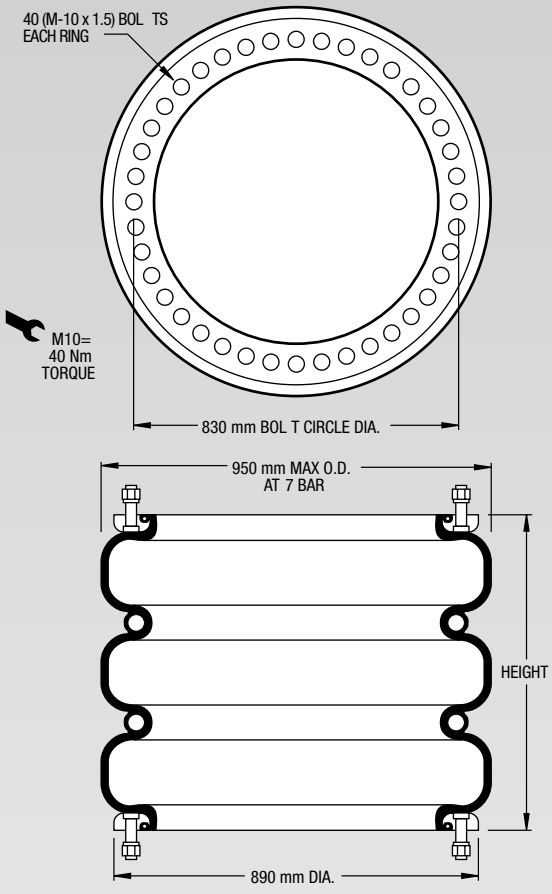

NOTE: The effective length of the 45 mm bolt is 23 mm in this bead ring.

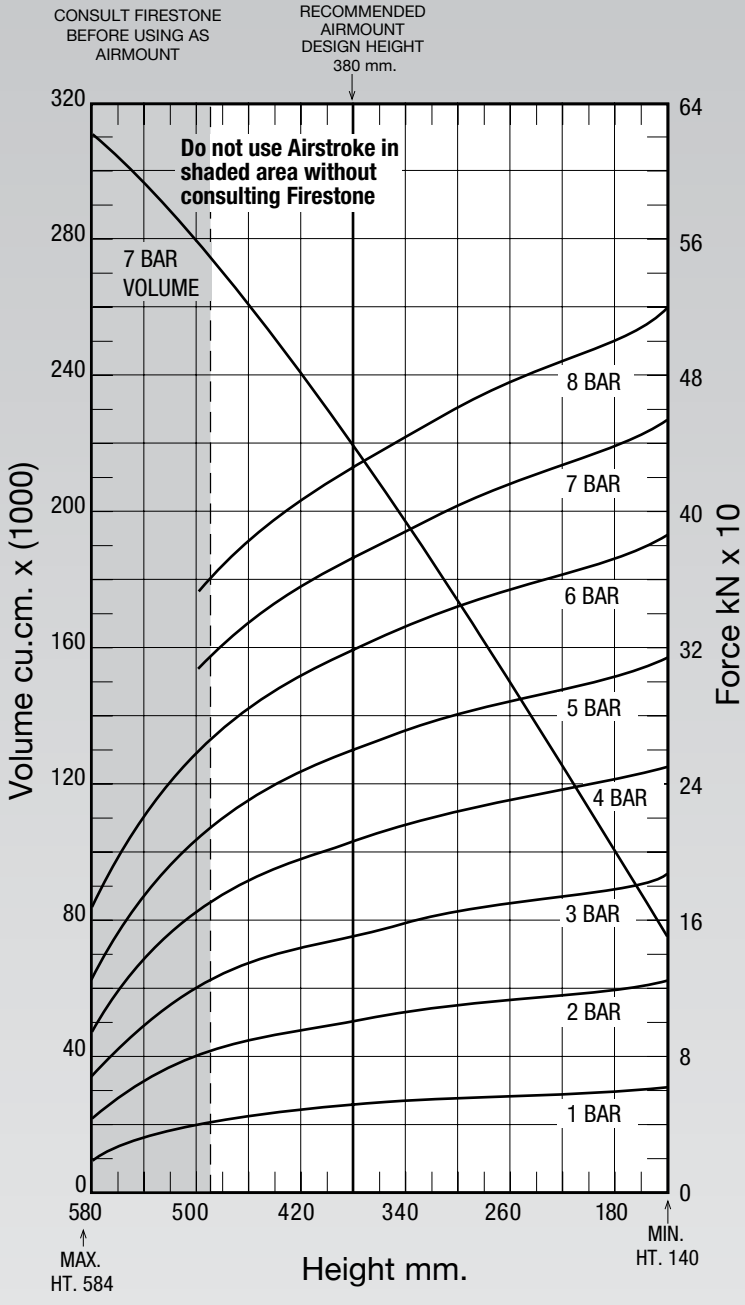

See page 12 for instructions on how to use chart.

Dynamic Characteristics at 380 mm Design Height
(Required for Airmount isolator design only)

Gauge Pressure (BAR)	Load (kN)	Spring Rate (kN/m)	Natural Frequency Hz
3	150.16	853	1.19
4	204.95	1110	1.16
5	258.67	1358	1.14
6	317.66	1614	1.12
7	371.47	1839	1.11

Force Table (Use for Airstroke™ actuator design)

Assembly Height (mm)	Volume @ 7 BAR (cu cm)	EFF Area @ 7 BAR (cm sq)	kN Force @ 3 BAR	@ 4 BAR	@ 5 BAR	@6 BAR	@7 BAR
480	270750	4561	127.37	173.02	217.83	270.35	319.21
440	250951	4919	138.66	188.24	237.29	292.98	344.32
400	230507	5189	146.63	199.91	252.25	310.21	363.21
360	208945	5418	153.57	209.53	264.45	324.50	379.23
320	185692	5635	160.48	217.86	274.75	337.23	394.37
280	161999	5837	166.81	225.16	283.33	348.39	408.53
240	138075	6014	171.63	231.86	290.68	357.85	420.92
200	113324	6165	175.04	238.45	297.89	366.36	431.46
160	87906	6334	180.41	245.13	306.87	377.11	443.32

	Description	Assembly Order No.
Style 4004 Two Ply Bellows	Blind nuts, 1/8 NPT	W02-358-4004
Assembly weight . . . . . .45 kg.		

NOTE: Standard assembly is imperial.

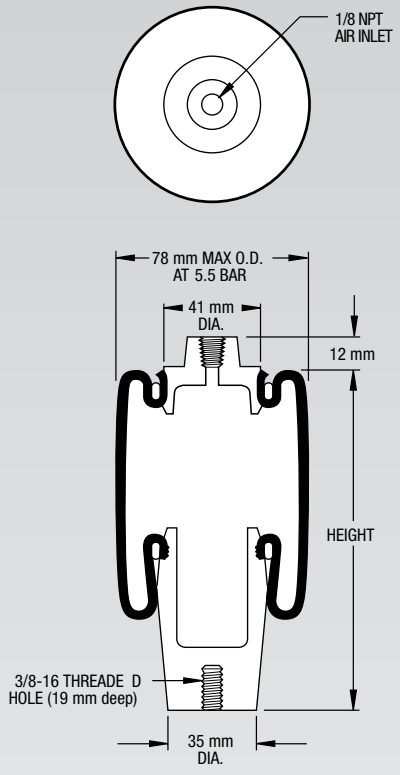

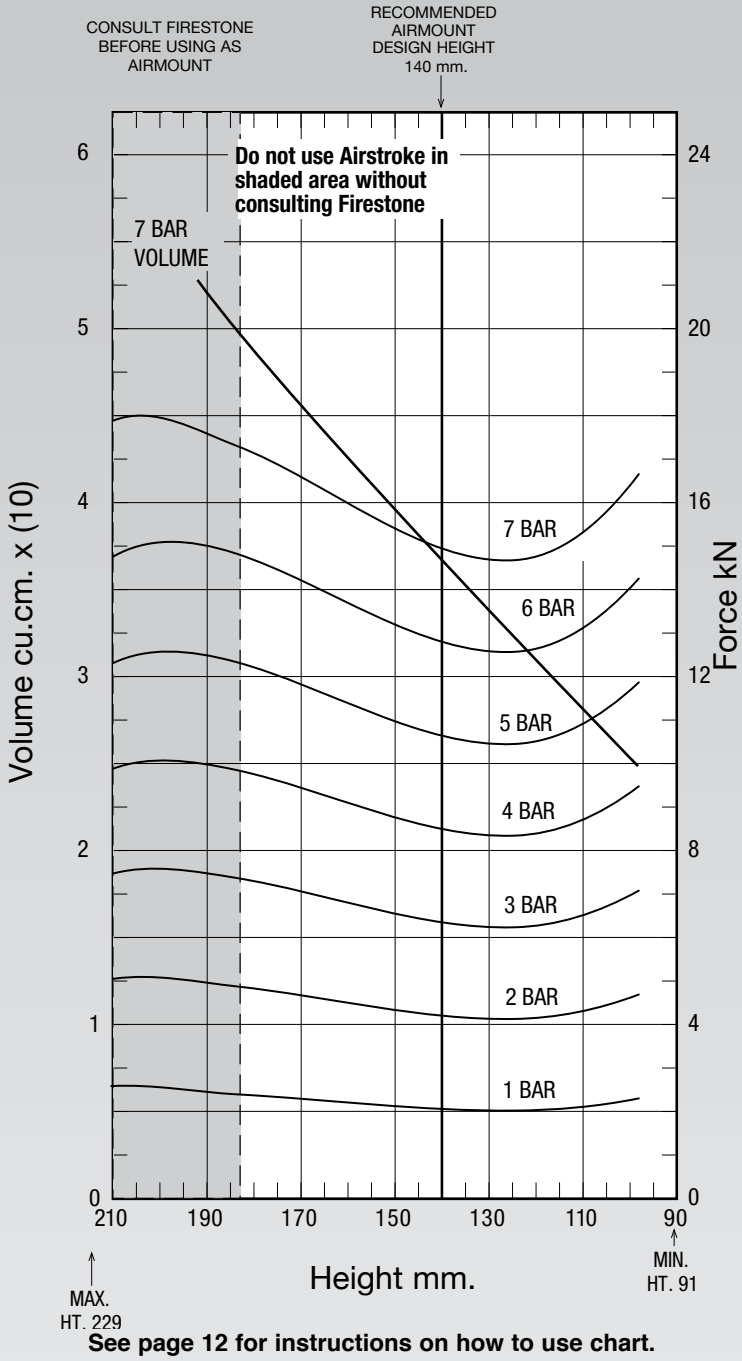

NOTE: Bellows will not compress properly with less than .7 BAR internal pressure.

See page 12 for instructions on how to use chart.

Dynamic Characteristics at 140 mm Design Height
(Required for Airmount isolator design only)

Gauge Pressure (BAR)	Load (kN)	Spring Rate (kN/m)	Natural Frequency Hz
4	9.1	9.63	1.88
5	11.1	12.25	1.78
6	13.4	15.93	1.74
7	15.6	17.3	1.59

Force Table (Use for Airstroke™ actuator design)

Assembly Height (mm)	Volume @ 7 BAR (cu cm)	EFF Area @ 7 BAR (cm sq)	kN Force @ 3 BAR	@ 4 BAR	@ 5 BAR	@6 BAR	@7 BAR
180	438	25	.74	1.01	1.26	1.53	1.78
170	411	26	.74	1.01	1.28	1.58	1.84
160	383	26	.72	1.00	1.27	1.58	1.85
150	355	26	.70	.98	1.25	1.55	1.82
140	325	25	.68	.95	1.21	1.51	1.78
130	297	24	.66	.92	1.17	1.45	1.71
120	272	24	.65	.90	1.13	1.40	1.65
110	246	23	.64	.88	1.11	1.36	1.59
100	225	22	.63	.86	1.09	1.33	1.55

	Description	Assembly Order No.
Style 7012 Two Ply Bellows	Blind nut, 1/8 NPT	W02-358-7002
Assembly weight ..... .82 kg.		

NOTE: Standard assembly is imperial.

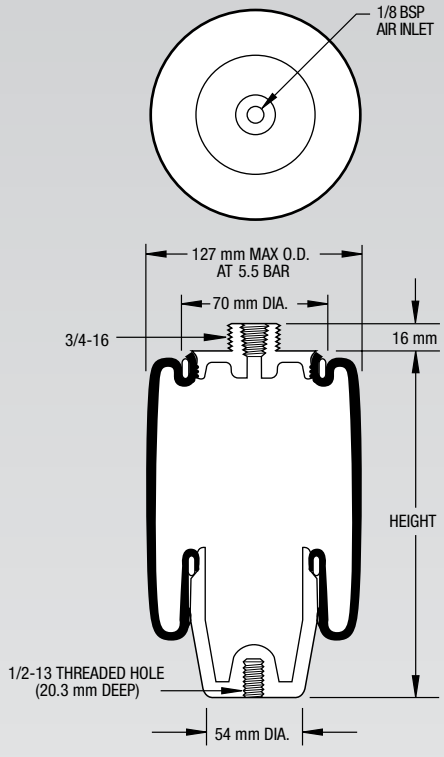

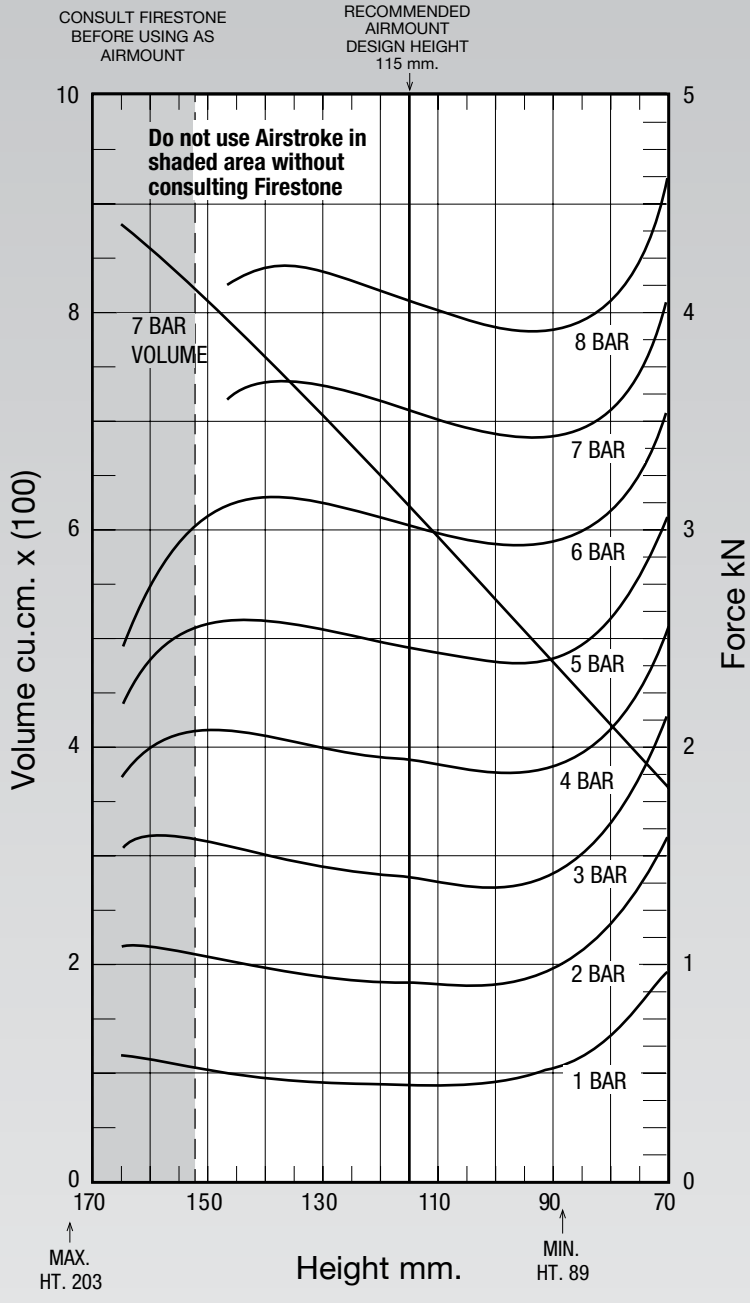

See page 12 for instructions on how to use chart.

NOTE: Bellows will not compress properly with less than .7 BAR internal pressure.

Dynamic Characteristics at 115 mm Design Height
(Required for Airmount isolator design only)

Gauge Pressure (BAR)	Load (kN)	Spring Rate (kN/m)	Natural Frequency Hz
3	1.81	13	1.31
4	2.51	18	1.33
5	3.18	23	1.33
6	3.85	33	1.47
7	4.44	43	1.55

Force Table (Use for Airstroke™ actuator design)

Assembly Height (mm)	Volume @ 7 BAR (cu cm)	EFF Area @ 7 BAR (cm sq)	kN Force @ 3 BAR	@ 4 BAR	@ 5 BAR	@6 BAR	@7 BAR
240	1676	56	1.83	2.45	3.06	3.52	3.94
220	1547	62	1.82	2.52	3.18	3.81	4.37
200	1409	65	1.77	2.48	3.15	3.89	4.56
180	1271	65	1.71	2.42	3.07	3.83	4.51
160	1134	61	1.65	2.33	2.97	3.67	4.30
140	1000	58	1.63	2.22	2.83	3.48	4.06

	Description	Assembly Order No.
Style 7010 Two Ply Bellows	Blind nuts, 1/8 NPT	W02-358-7010
Assembly weight ..... .73 kg.		

NOTE: Standard assembly is imperial.

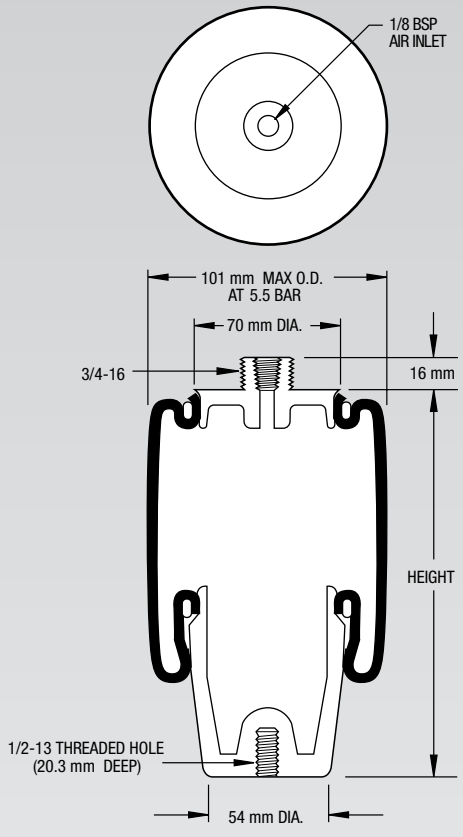

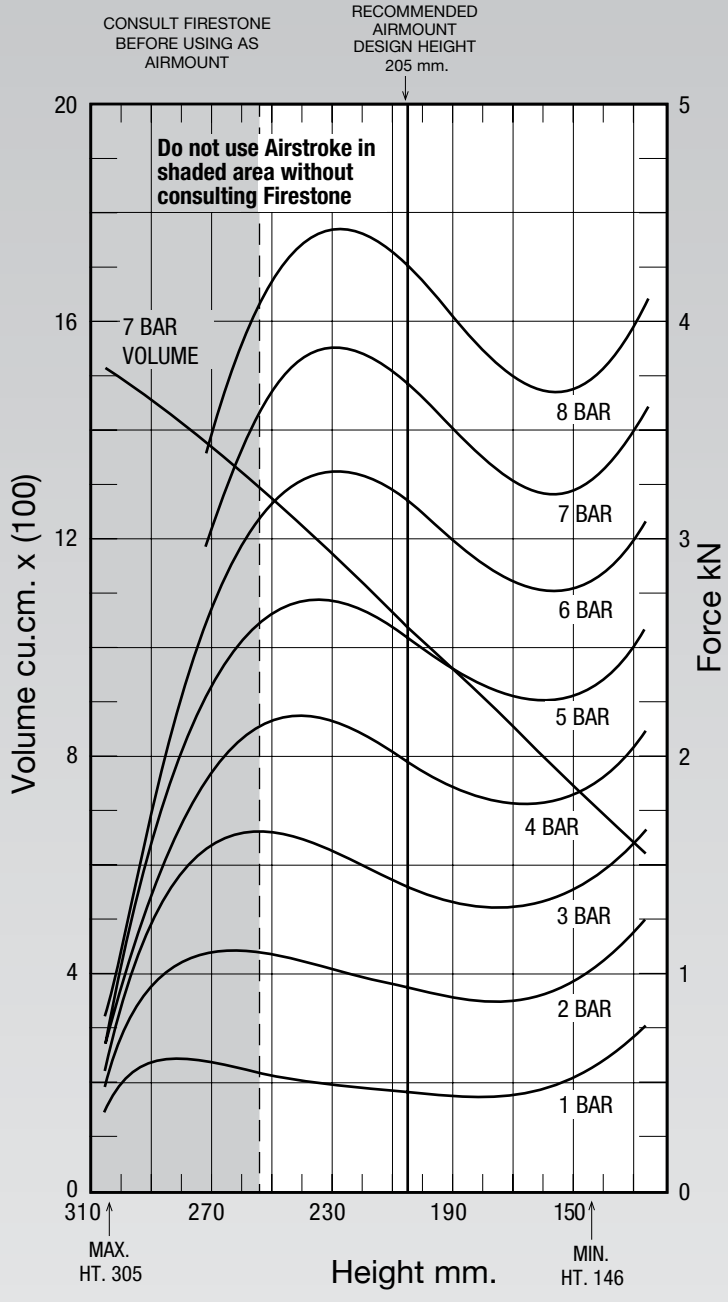

NOTE: Bellows will not compress properly with less than .7 BAR internal pressure.

See page 12 for instructions on how to use chart.

Dynamic Characteristics at 205 mm Design Height
(Required for Airmount isolator design only)

Gauge Pressure (BAR)	Load (kN)	Spring Rate (kN/m)	Natural Frequency Hz
3	1.41	8	1.18
4	1.99	10	1.11
5	2.55	13	1.14
6	3.17	17	1.14
7	3.72	18.5	1.11

Force Table (Use for Airstroke™ actuator design)

Assembly Height (mm)	Volume @ 7 BAR (cu cm)	EFF Area @ 7 BAR (cm sq)	kN Force @ 3 BAR	@ 4 BAR	@ 5 BAR	@6 BAR	@7 BAR
260	1321	48	1.65	2.08	2.52	2.95	3.39
240	1224	55	1.63	2.18	2.71	3.27	3.82
220	1123	55	1.51	2.10	2.66	3.29	3.86
200	1016	52	1.39	1.95	2.50	3.12	3.66
180	906	48	1.31	1.81	2.33	2.90	3.38
160	798	46	1.33	1.78	2.25	2.76	3.21

	Description	Assembly Order No.
Style 7012 Two Ply Bellows	Blind nut, 1/8 NPT	W02-358-7012
Assembly weight ..... .82 kg.		

NOTE: Standard assembly is imperial.

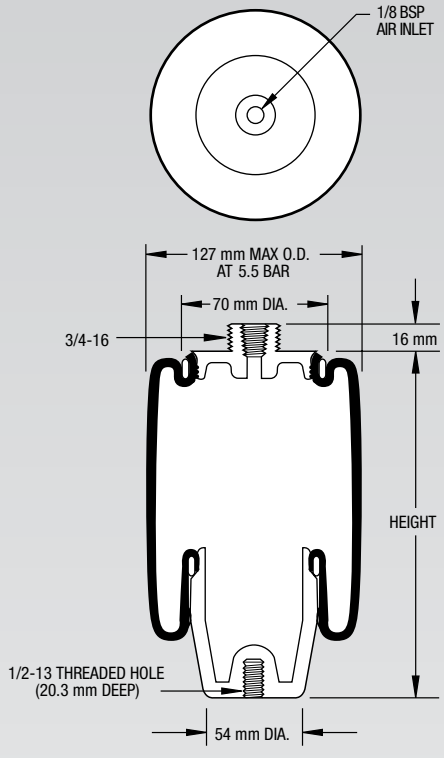

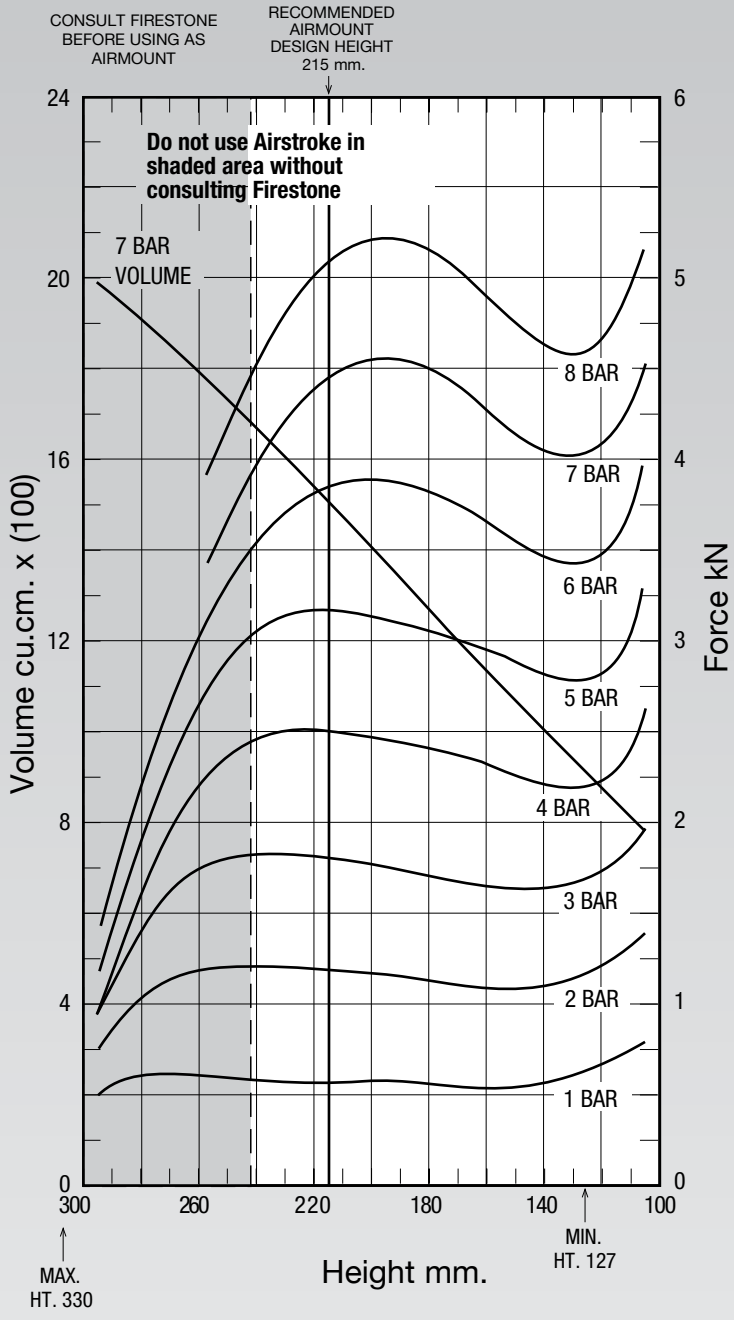

See page 12 for instructions on how to use chart.

NOTE: Bellows will not compress properly with less than .7 BAR internal pressure.

Dynamic Characteristics at 215 mm Design Height
(Required for Airmount isolator design only)

Gauge Pressure (BAR)	Load (kN)	Spring Rate (kN/m)	Natural Frequency Hz
3	1.81	13	1.31
4	2.51	18	1.33
5	3.18	23	1.33
6	3.85	33	1.47
7	4.44	43	1.55

Force Table (Use for Airstroke™ actuator design)

Assembly Height (mm)	Volume @ 7 BAR (cu cm)	EFF Area @ 7 BAR (cm sq)	kN Force @ 3 BAR	@ 4 BAR	@ 5 BAR	@6 BAR	@7 BAR
240	1676	56	1.83	2.45	3.06	3.52	3.94
220	1547	62	1.82	2.52	3.18	3.81	4.37
200	1409	65	1.77	2.48	3.15	3.89	4.56
180	1271	65	1.71	2.42	3.07	3.83	4.51
160	1134	61	1.65	2.33	2.97	3.67	4.30
140	1000	58	1.63	2.22	2.83	3.48	4.06

	Description	Assembly Order No.
Style 100/70 Two Ply Bellows	Blind nuts, 1/4 NPT	W02-358-9025
Assembly weight ..... 1.3 kg.		

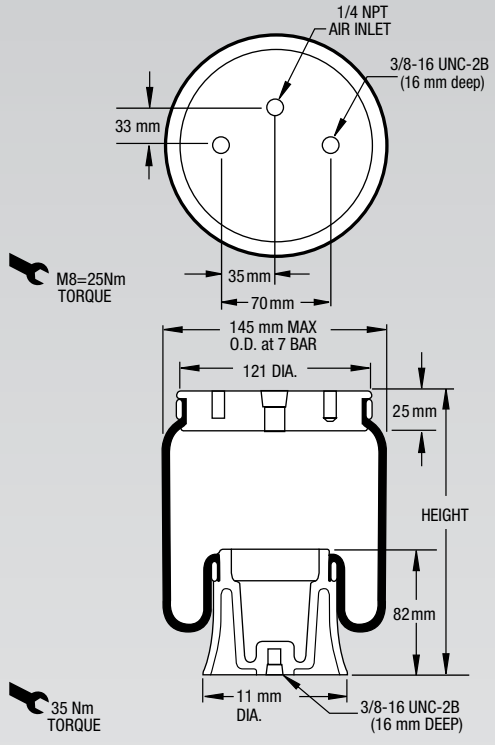

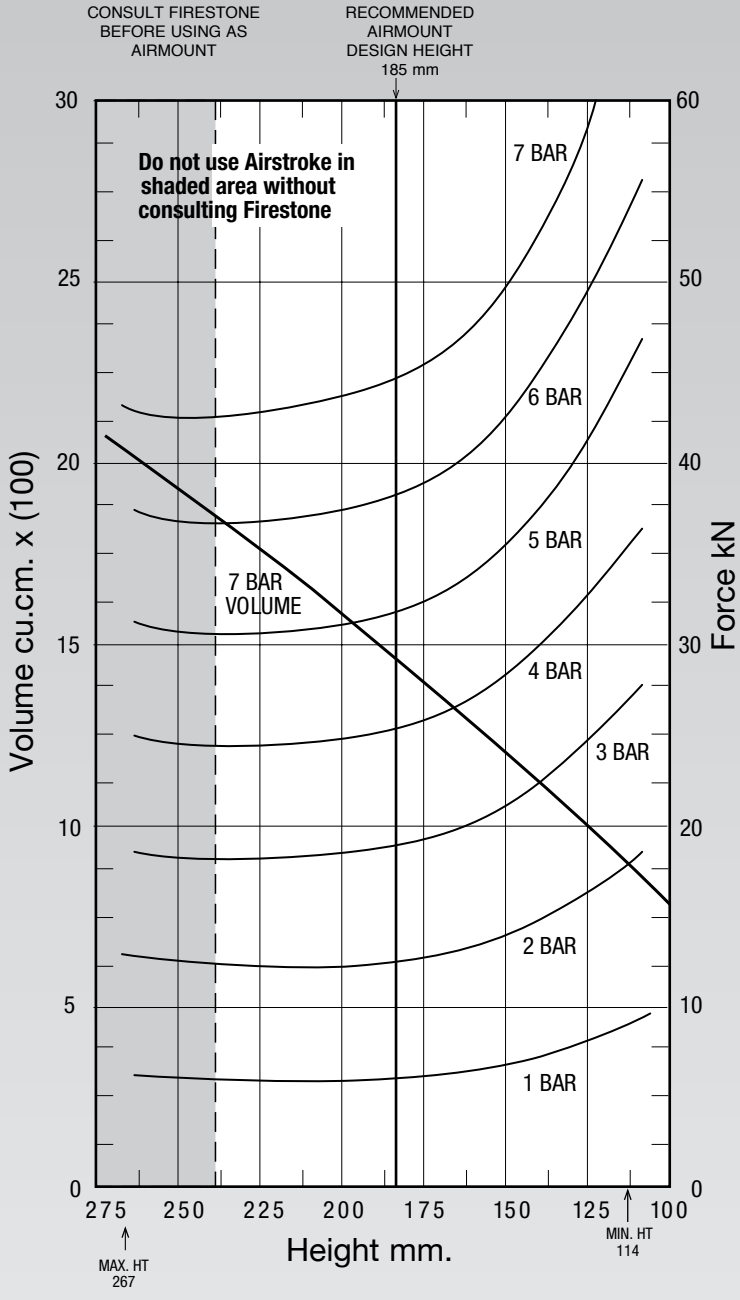

NOTE: Recommended operating pressure not to exceed 100 psig.

See page 12 for instructions on how to use chart.

Dynamic Characteristics at 185 mm Design Height
(Required for Airmount isolator design only)

Gauge Pressure (BAR)	Load (kN)	Spring Rate (kN/m)	Natural Frequency Hz
4	2.6	23	1.73
5	3.3	31	1.63
6	3.9	40	1.57
7	4.5	48	1.53

Force Table (Use for Airstroke™ actuator design)

Assembly Height (mm)	Volume @ 7 BAR (cu cm)	EFF Area @ 7 BAR (cm sq)	kN Force @ 3 BAR	@ 4 BAR	@ 5 BAR	@6 BAR	@7 BAR
250	1940.9	61.5	1846	2462	3077	3693	4308
225	1757.8	60.9	1827	2436	3045	3654	4263
200	1565.0	62.3	1868	2490	3113	3735	4358
175	1373.9	64.2	1926	2568	3210	3852	4494
150	1180.8	70.5	2114	2818	3523	4227	4932
125	976.0	82.6	2479	3306	4132	4959	5785

NOTE: All Assembly Order Numbers are for bead plate parts unless noted otherwise.

	Description	Assembly Order No.
Style 1T14C-1	Blind nuts, 1/4 NPT	W01-358-5310
	Blind nuts, 1/4 NPT, bumper	W01-358-5311
Two Ply Bellows	Blind nuts, 3/4 NPT	W01-358-5305
	Blind nuts, 3/4 NPT, bumper	W01-358-5306
	Countersunk steel bead ring 1 3/4 bolts, nuts, washers	W01-358-5307
Assembly weight ..... 2.95 kg.		

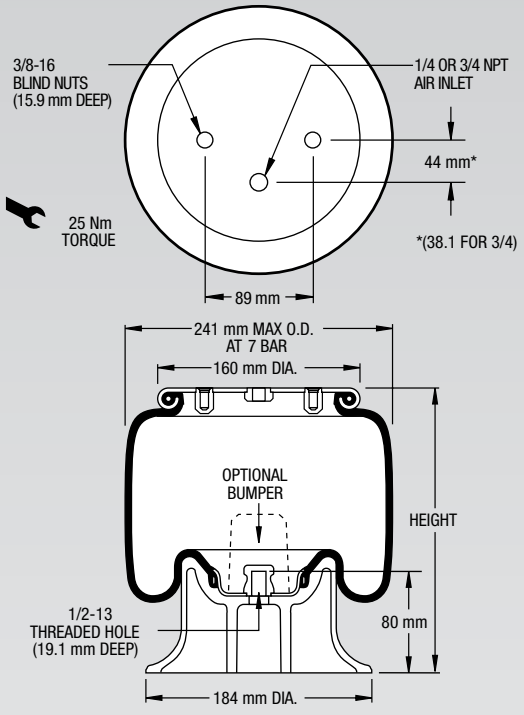

NOTE: Bellows will not compress properly with less than .7 BAR internal pressure.

NOTE: A bead plate part is shown. This part is also available with a bead ring. Bolts are not included. See pages 8-10 for explanation.

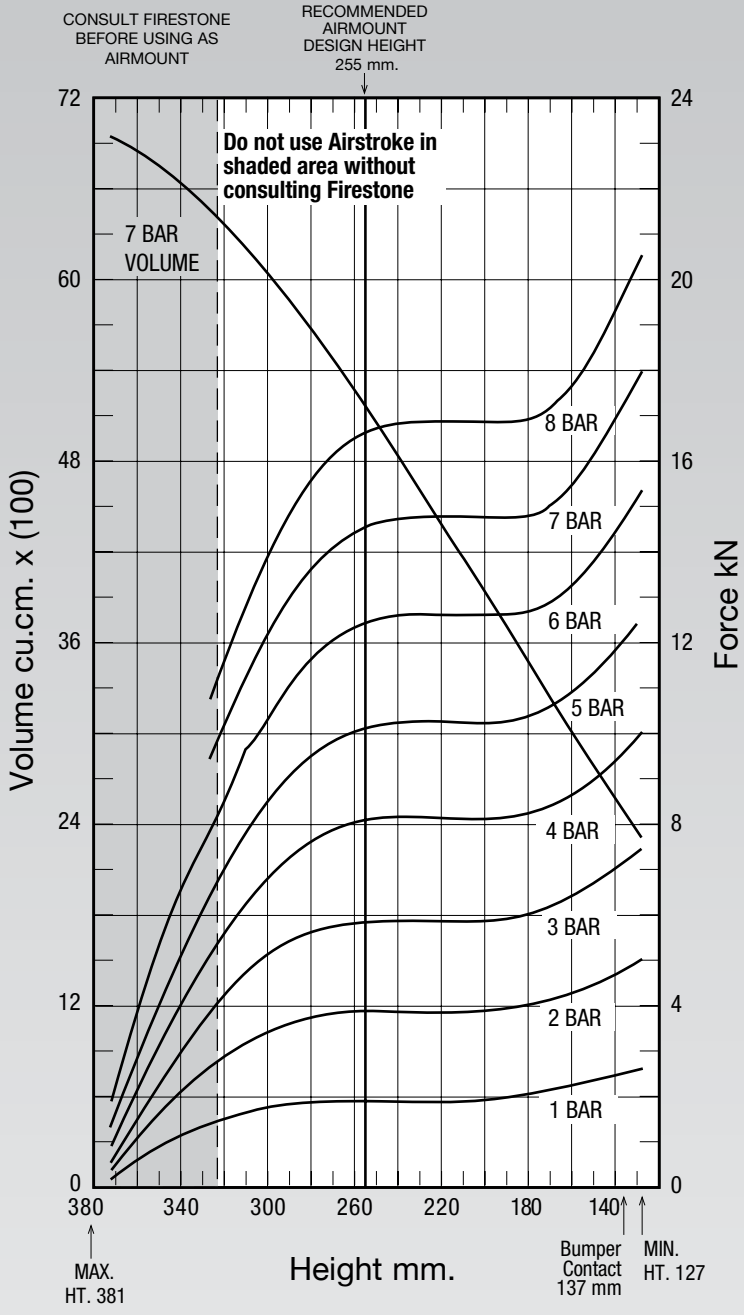

See page 12 for instructions on how to use chart.

Dynamic Characteristics at 255 mm Design Height
(Required for Airmount isolator design only)

Gauge Pressure (BAR)	Load (kN)	Spring Rate (kN/m)	Natural Frequency Hz
3	5.88	47	1.41
4	8.06	67	1.44
5	10.14	83	1.43
6	12.41	102	1.43
7	14.50	117	1.42

Force Table (Use for Airstroke™ actuator design)

Assembly Height (mm)	Volume @ 7 BAR (cu cm)	EFF Area @ 7 BAR (cm sq)	kN Force @ 3 BAR	@ 4 BAR	@ 5 BAR	@6 BAR	@7 BAR
300	6065	171	5.05	6.70	8.39	10.23	11.94
280	5704	192	5.62	7.45	9.45	11.52	13.45
260	5306	205	5.86	8.00	10.06	12.30	14.36
240	4881	210	5.89	8.15	10.28	12.60	14.73
220	4438	211	5.89	8.15	10.29	12.63	14.76
200	3967	211	5.89	8.15	10.29	12.63	14.76
180	3494	211	5.98	8.19	10.32	12.63	14.76
160	3027	220	6.39	8.59	10.80	13.18	15.37

1T14C-3 Firestone

NOTE: All Assembly Order Numbers are for bead plate parts unless noted otherwise.

	Description	Assembly Order No.
Style 1T14C-3 Two Ply Bellows	Blind nuts, 1/4 NPT	W01-358-5405
Assembly weight ..... 3.08 kg.		

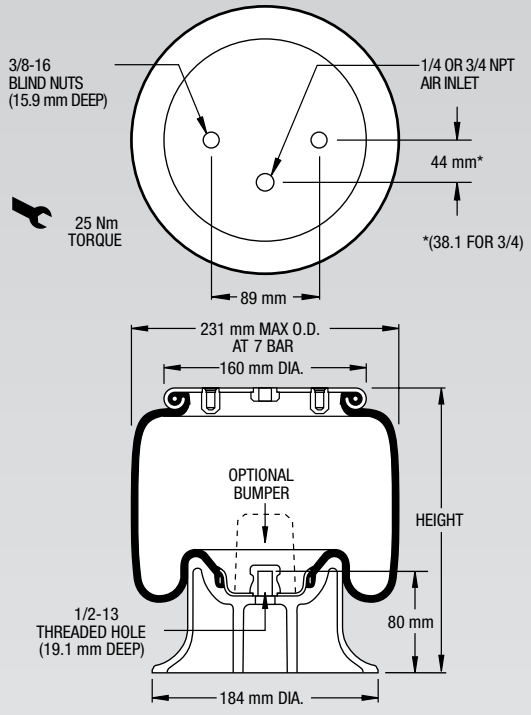

NOTE: Bellows will not compress properly with less than .7 BAR internal pressure.

NOTE: A bead plate part is shown. This part is also available with a bead ring. Bolts are not included. See pages 8-10 for explanation.

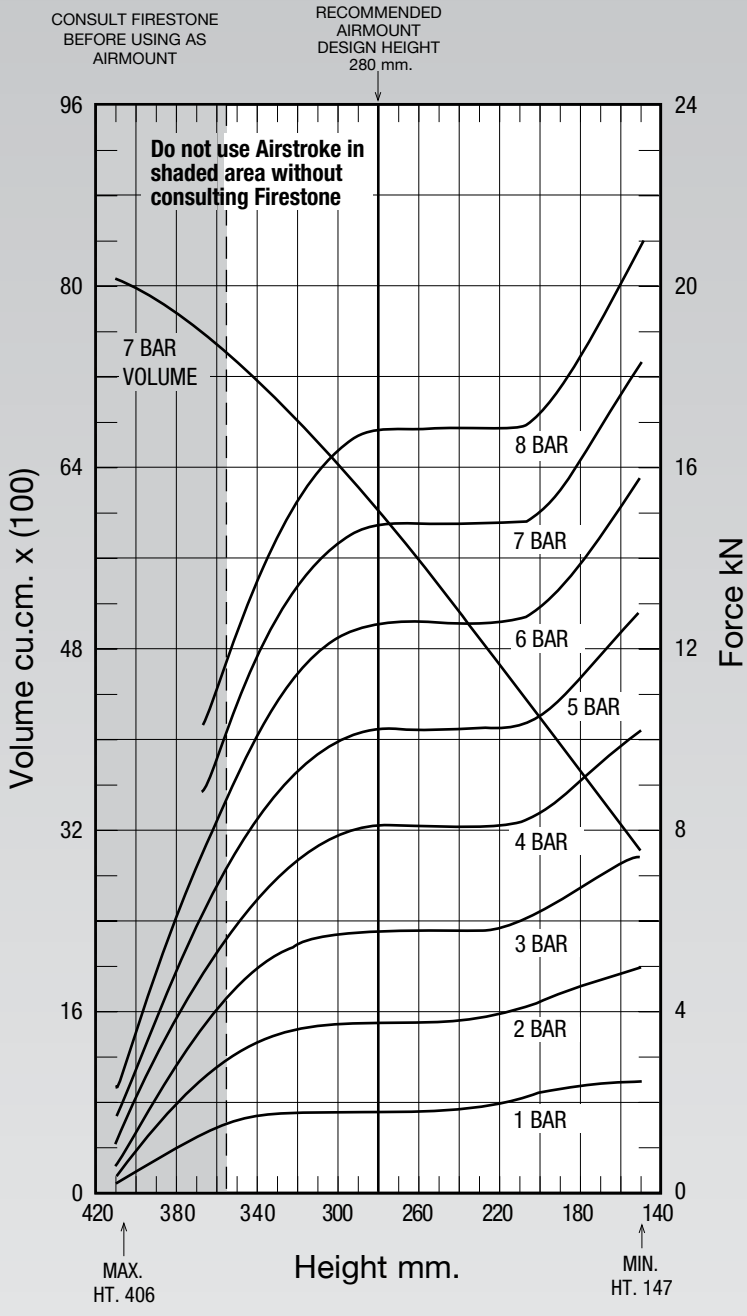

See page 12 for instructions on how to use chart.

Dynamic Characteristics at 280 mm Design Height
(Required for Airmount isolator design only)

Gauge Pressure (BAR)	Load (kN)	Spring Rate (kN/m)	Natural Frequency Hz
3	5.80	38	1.27
4	8.10	53	1.28
5	10.19	64	1.25
6	12.55	78	1.24
7	14.72	90	1.23

Force Table (Use for Airstroke™ actuator design)

Assembly Height (mm)	Volume @ 7 BAR (cu cm)	EFF Area @ 7 BAR (cm sq)	kN Force @ 3 BAR	@ 4 BAR	@ 5 BAR	@6 BAR	@7 BAR
320	6836	190	5.47	7.34	9.26	11.37	13.30
300	6447	204	5.74	7.88	9.92	12.20	14.30
280	6041	210	5.80	8.10	10.19	12.55	14.72
260	5612	211	5.80	8.11	10.22	12.58	14.75
240	5165	211	5.80	8.11	10.22	12.58	14.75
220	4705	211	5.85	8.11	10.23	12.59	14.75
200	4221	214	6.17	8.36	10.54	12.86	14.98
180	3735	229	6.68	8.99	11.31	13.78	16.04

NOTE: All Assembly Order Numbers are for bead plate parts unless noted otherwise.

	Description	Assembly Order No.
Style	Blind nuts, 1/4 NPT	W01-358-5712
1T14C-7	Blind nuts, 3/4 NPT	W01-358-5708
Two Ply		
Bellows		
Assembly weight..... 3.17 kg.		

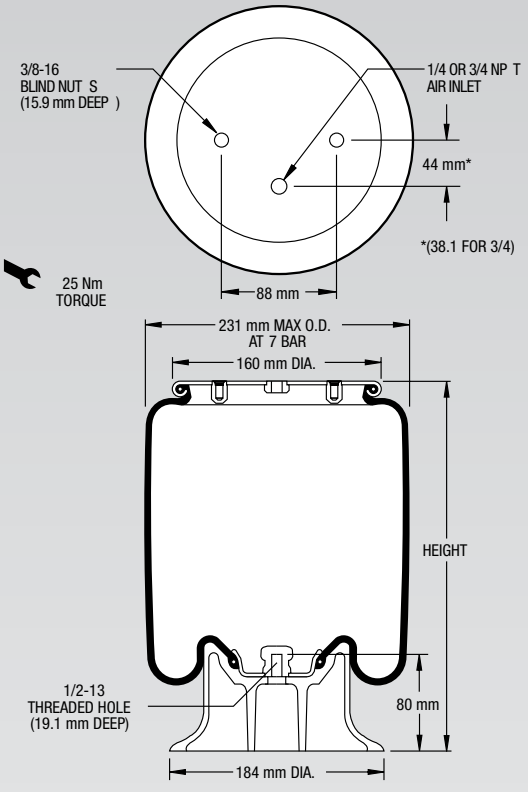

NOTE: Bellows will not compress properly with less than .7 BAR internal pressure.

NOTE: A bead plate part is shown. This part is also available with a bead ring. Bolts are not included. See pages 8-10 for explanation.

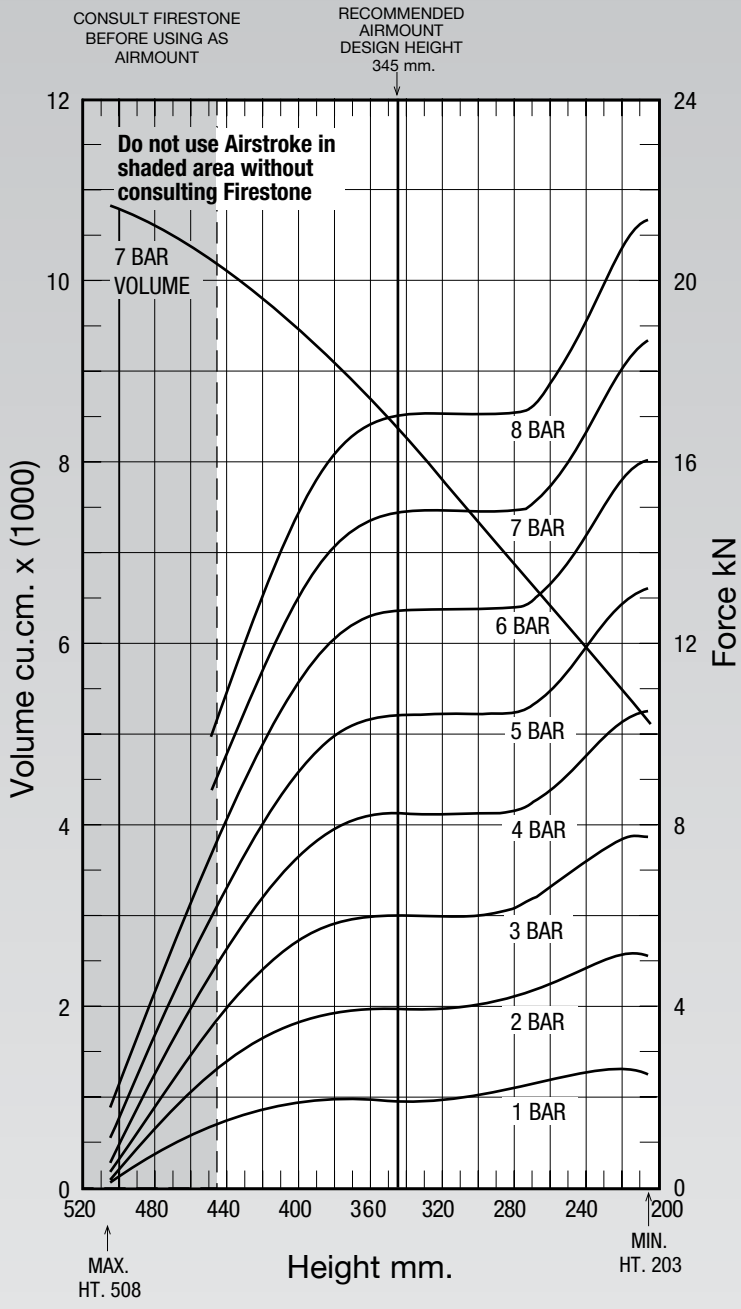

See page 12 for instructions on how to use chart.

Dynamic Characteristics at 345 mm Design Height
(Required for Airmount isolator design only)

Gauge Pressure (BAR)	Load (kN)	Spring Rate (kN/m)	Natural Frequency Hz
3	6.02	30	1.11
4	8.27	39	1.09
5	10.44	48	1.07
6	12.79	59	1.07
7	14.92	68	1.06

Force Table (Use for Airstroke™ actuator design)

Assembly Height (mm)	Volume @ 7 BAR (cu cm)	EFF Area @ 7 BAR (cm sq)	kN Force @ 3 BAR	@ 4 BAR	@ 5 BAR	@6 BAR	@7 BAR
440	10160	134	3.90	5.17	6.54	8.02	9.37
400	9509	184	5.43	7.25	9.11	11.07	12.87
360	8729	210	6.00	8.20	10.34	12.63	14.72
320	7832	213	6.02	8.27	10.44	12.79	14.93
280	6898	213	6.17	8.30	10.46	12.79	14.93
240	5973	238	7.15	9.49	11.85	14.33	16.65

1T15T-1 Firestone AIRSTROKE ACTUATORS AIRMOUNT ISOLATORS

NOTE: All Assembly Order Numbers are for bead plate parts unless noted otherwise.

	Description	Assembly Order No.
Style 1T15T-1	Blind nuts, 1/4 BSP, bumper	W01-M58-6322
Two Ply Bellows	Blind nuts, 3/4 BSP	W01-M58-6325
Assembly weight ..... 5 kg.		

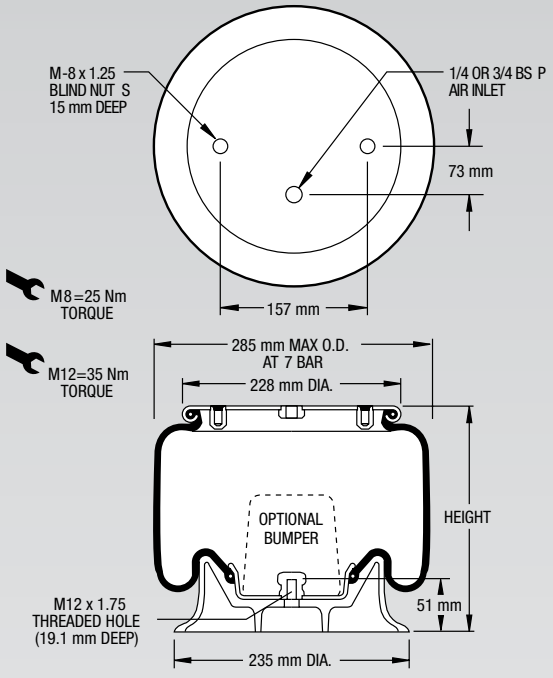

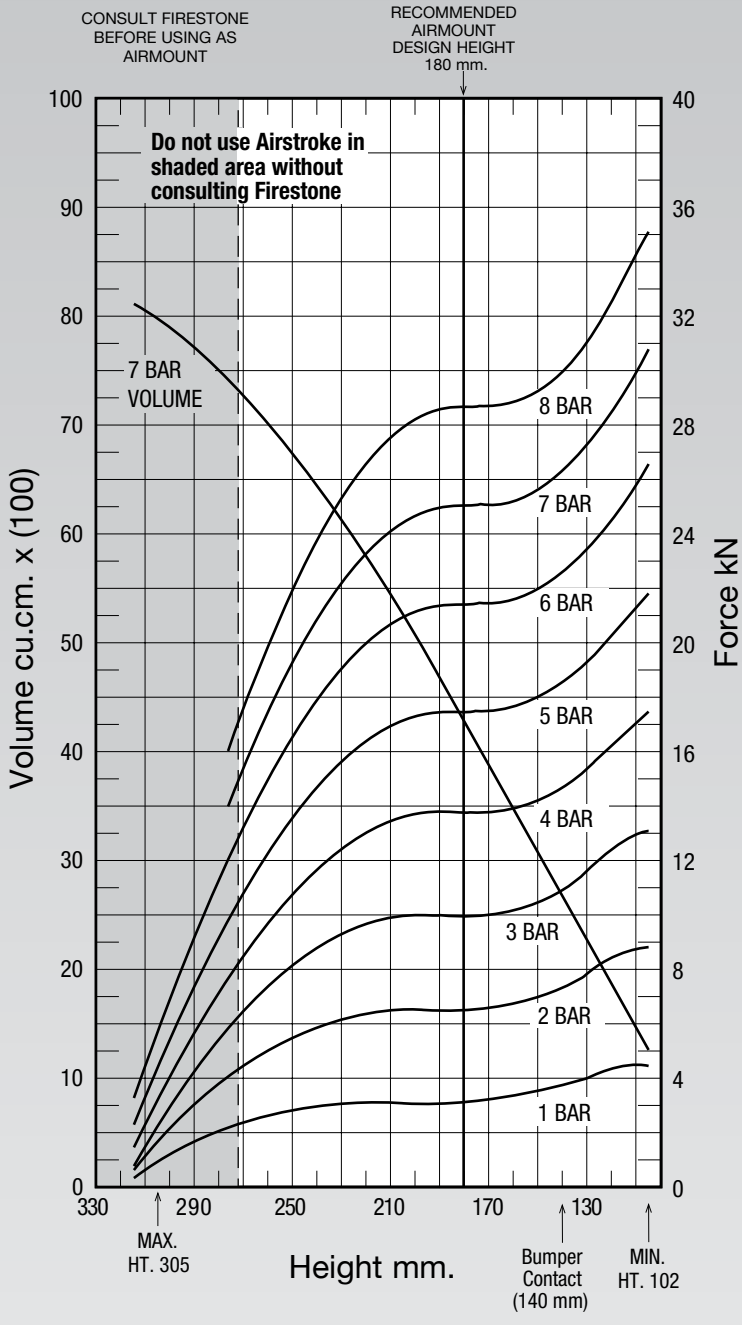

NOTE: Bellows will not compress properly with less than .7 BAR internal pressure.

NOTE: A bead plate part is shown. This part is also available with a bead ring. Bolts are not included. See pages 8-10 for explanation.

See page 12 for instructions on how to use chart.

Dynamic Characteristics at 180 mm Design Height
(Required for Airmount isolator design only)

Gauge Pressure (BAR)	Load (kN)	Spring Rate (kN/m)	Natural Frequency Hz
3	9.93	175	2.09
4	13.77	229	2.03
5	17.43	279	1.99
6	21.43	334	1.97
7	25.04	384	1.95

Force Table (Use for Airstroke™ actuator design)

Assembly Height (mm)	Volume @ 7 BAR (cu cm)	EFF Area @ 7 BAR (cm sq)	kN Force @ 3 BAR	@ 4 BAR	@ 5 BAR	@6 BAR	@7 BAR
260	7000	247	7.32	9.59	12.10	14.80	17.26
240	6423	298	8.81	11.67	14.69	17.91	20.85
220	5773	334	9.66	13.04	16.43	20.07	23.38
200	5041	353	9.92	13.65	17.25	21.14	24.67
180	4262	358	9.93	13.77	17.43	21.43	25.04
160	3450	361	10.10	13.93	17.61	21.62	25.26
140	2623	375	10.94	14.70	18.48	22.54	26.27
120	1820	408	12.35	16.26	20.32	24.59	28.59

AIRSTROKE™ ACTUATORS AIRMOUNT™ ISOLATORS Firestone 1T15LP-3

NOTE: All Assembly Order Numbers are for bead plate parts unless noted otherwise.

	Description	Assembly Order No.
Style 1T15LP-3	Blind nuts, 1/4 BSP, bumper	W01-358-9049
Two Ply Bellows	Blind nuts, 3/4 BSP	W01-358-9051
Assembly weight ..... 6 kg.		

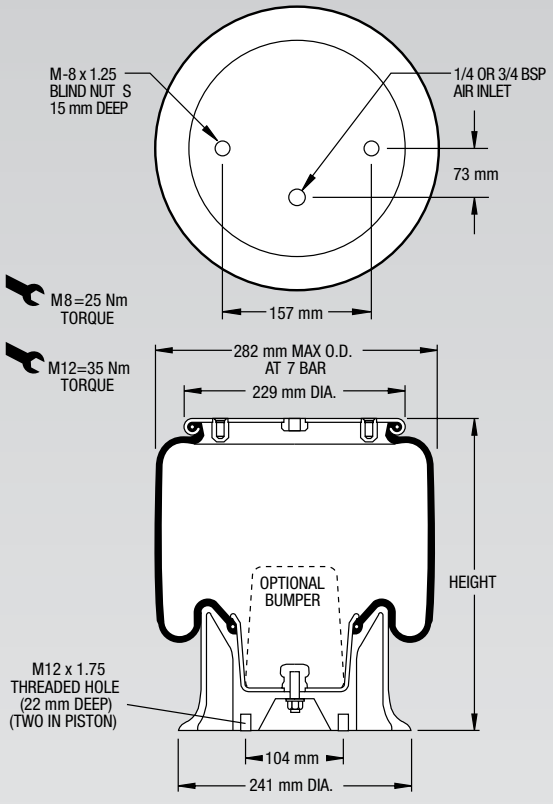

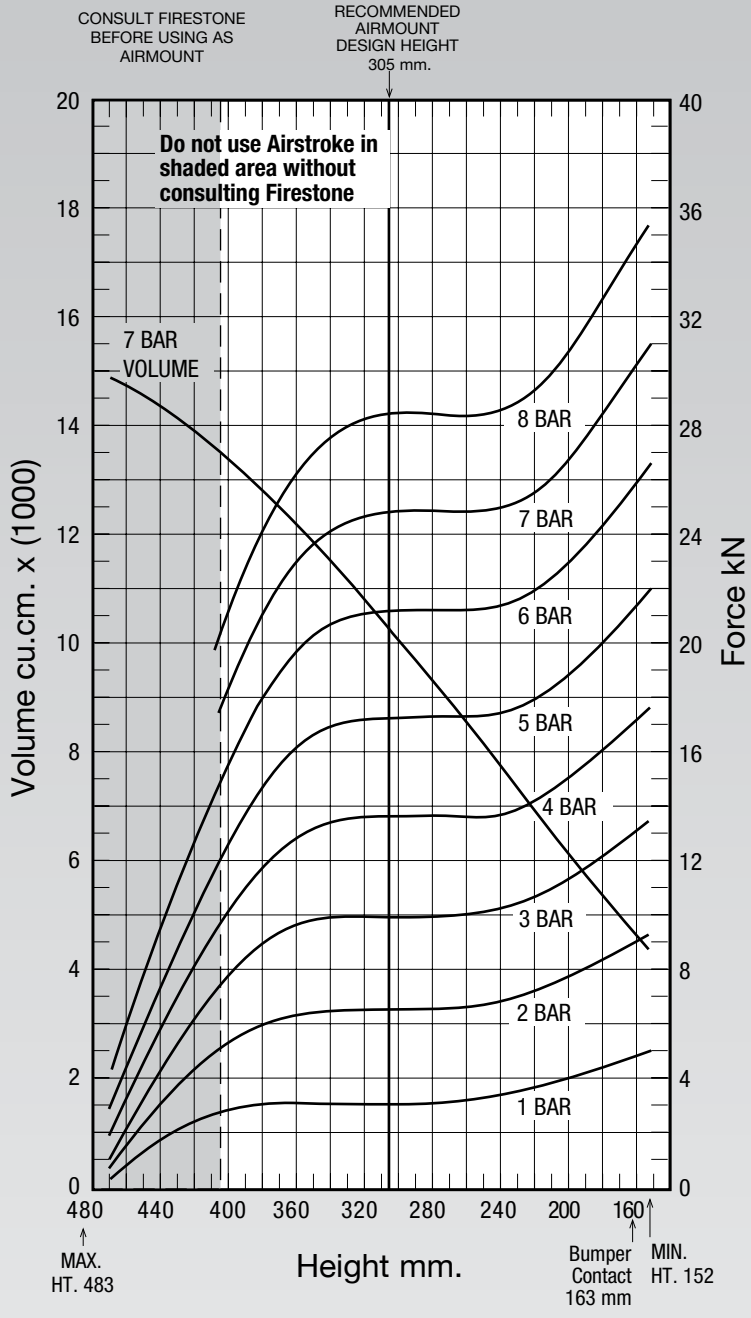

NOTE: Bellows will not compress properly with less than .7 BAR internal pressure.

NOTE: A bead plate part is shown. This part is also available with a bead ring. Bolts are not included. See pages 8-10 for explanation.

See page 12 for instructions on how to use chart.

Dynamic Characteristics at 305 mm Design Height
(Required for Airmount isolator design only)

Gauge Pressure (BAR)	Load (kN)	Spring Rate (kN/m)	Natural Frequency Hz
3	10.05	68	1.30
4	13.74	88	1.26
5	17.32	107	1.24
6	21.26	130	1.23
7	24.88	149	1.22

Force Table (Use for Airstroke™ actuator design)

Assembly Height (mm)	Volume @ 7 BAR (cu cm)	EFF Area @ 7 BAR (cm sq)	kN Force @ 3 BAR	@ 4 BAR	@ 5 BAR	@6 BAR	@7 BAR
400	13435	262	7.86	10.23	12.82	15.66	18.31
360	12261	327	9.66	12.86	16.12	19.63	22.90
320	10863	353	10.05	13.72	17.26	21.15	24.73
280	9362	356	10.05	13.74	17.32	21.27	24.89
240	7818	357	10.29	13.80	17.43	21.39	24.99
200	6240	383	11.38	15.06	18.88	22.99	26.81
160	4688	432	13.08	17.25	21.46	25.96	30.26

1T15L-4 Firestone AIRSTROKE ACTUATORS AIRMOUNT ISOLATORS

NOTE: All Assembly Order Numbers are for bead plate parts unless noted otherwise.

	Description	Assembly Order No.
Style	Blind nuts, 1/4 BSP	W01-M58-6255
1T15L-4	Blind nuts, 1/4 BSP, bumper	W01-M58-6256
Two Ply Bellows		
Assembly weight ..... 7.03 kg.		

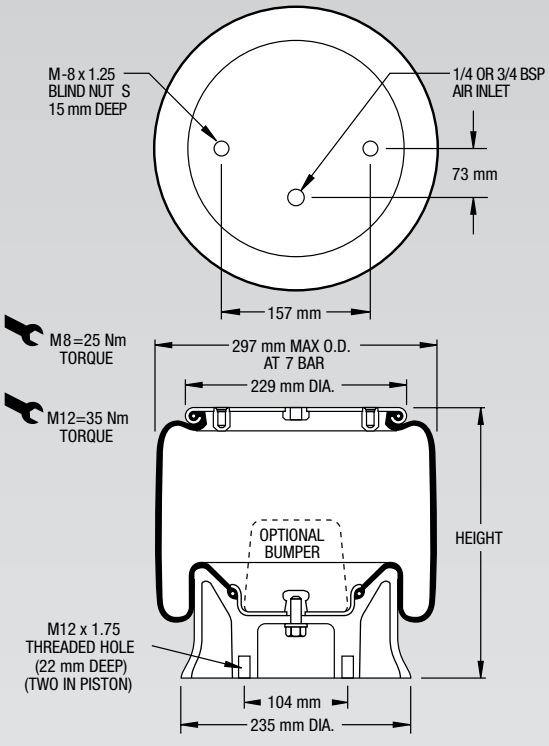

NOTE: Bellows will not compress properly with less than .7 BAR internal pressure.

NOTE: A bead plate part is shown. This part is also available with a bead ring. Bolts are not included. See pages 8-10 for explanation.

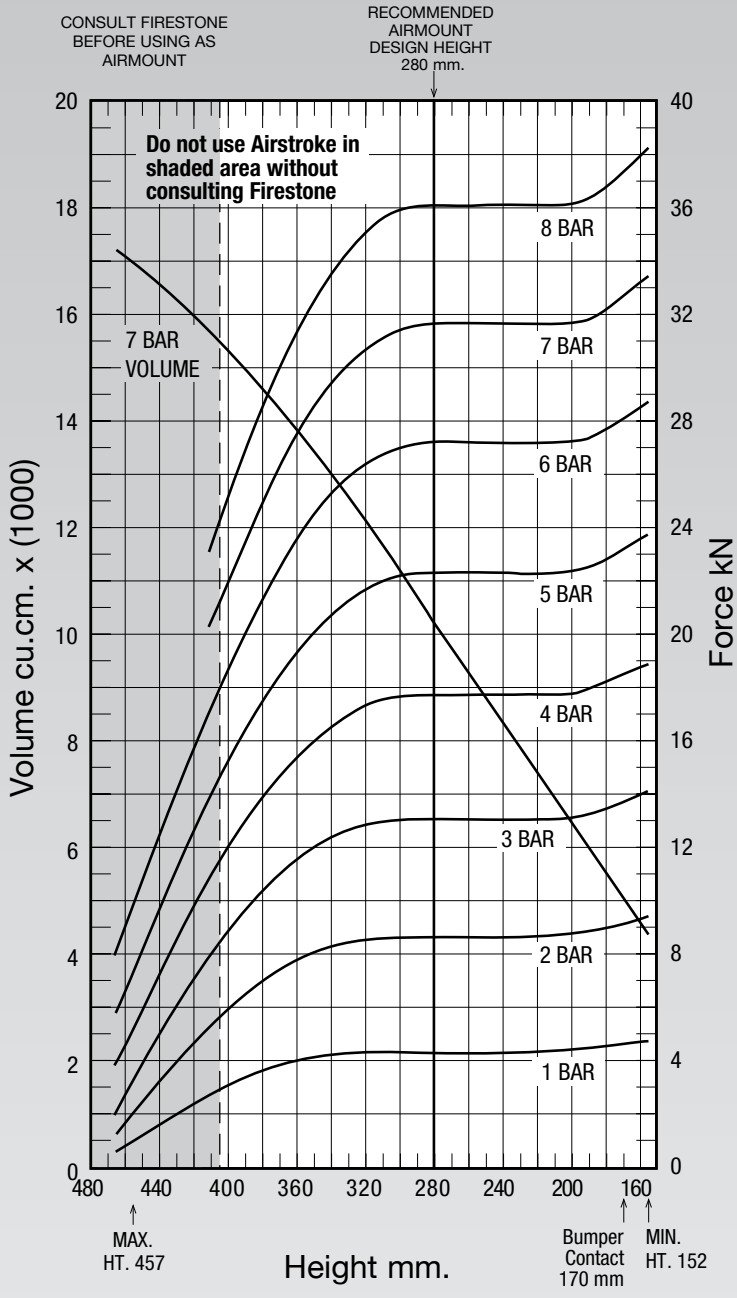

See page 12 for instructions on how to use chart.

Dynamic Characteristics at 280 mm Design Height
(Required for Airmount isolator design only)

Gauge Pressure (BAR)	Load (kN)	Spring Rate (kN/m)	Natural Frequency Hz
3	13.03	110	1.45
4	17.73	140	1.40
5	22.31	170	1.38
6	27.14	202	1.36
7	31.57	230	1.35

Force Table (Use for Airstroke™ actuator design)

Assembly Height (mm)	Volume @ 7 BAR (cu cm)	EFF Area @ 7 BAR (cm sq)	kN Force @ 3 BAR	@ 4 BAR	@ 5 BAR	@6 BAR	@7 BAR
400	15364	309	8.65	11.78	14.94	18.45	21.61
360	13880	389	11.44	15.27	19.18	23.35	27.19
320	12139	437	12.81	17.24	17.65	26.30	30.58
280	10291	451	13.03	17.73	22.31	27.14	31.57
240	8407	451	13.03	17.73	22.31	27.14	31.57
200	6496	451	13.06	17.73	22.31	27.14	31.57
160	4628	472	13.96	18.72	23.46	28.45	33.06

NOTE: All Assembly Order Numbers are for bead plate parts unless noted otherwise.

	Description	Assembly Order No.
Style 1T15M-0 Two Ply Bellows	Blind nuts, 1/4 NPT	W01-358-9030
	Blind nuts, 1/4 NPT, rubber bumper	W01-358-9031
	Blind nuts, 3/4 NPT	W01-358-9034
	Blind nuts, 3/4 NPT, rubber bumper	W01-358-9036
	Countersunk steel bead ring, 40 mm bolts, nuts, washers	W01-358-9038
Assembly weight ..... 5.22 kg.		

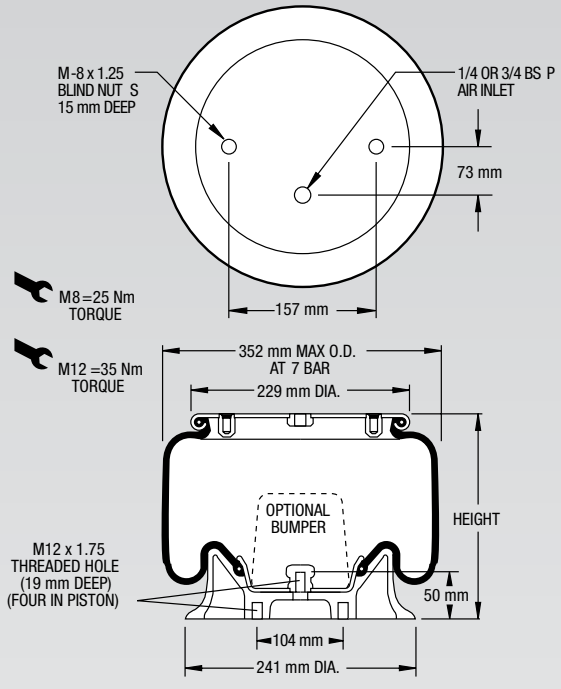

NOTE: Bellows will not compress properly with less than .7 BAR internal pressure.

NOTE: A bead plate part is shown. This part is also available with a bead ring. Bolts are not included. See pages 8-10 for explanation.

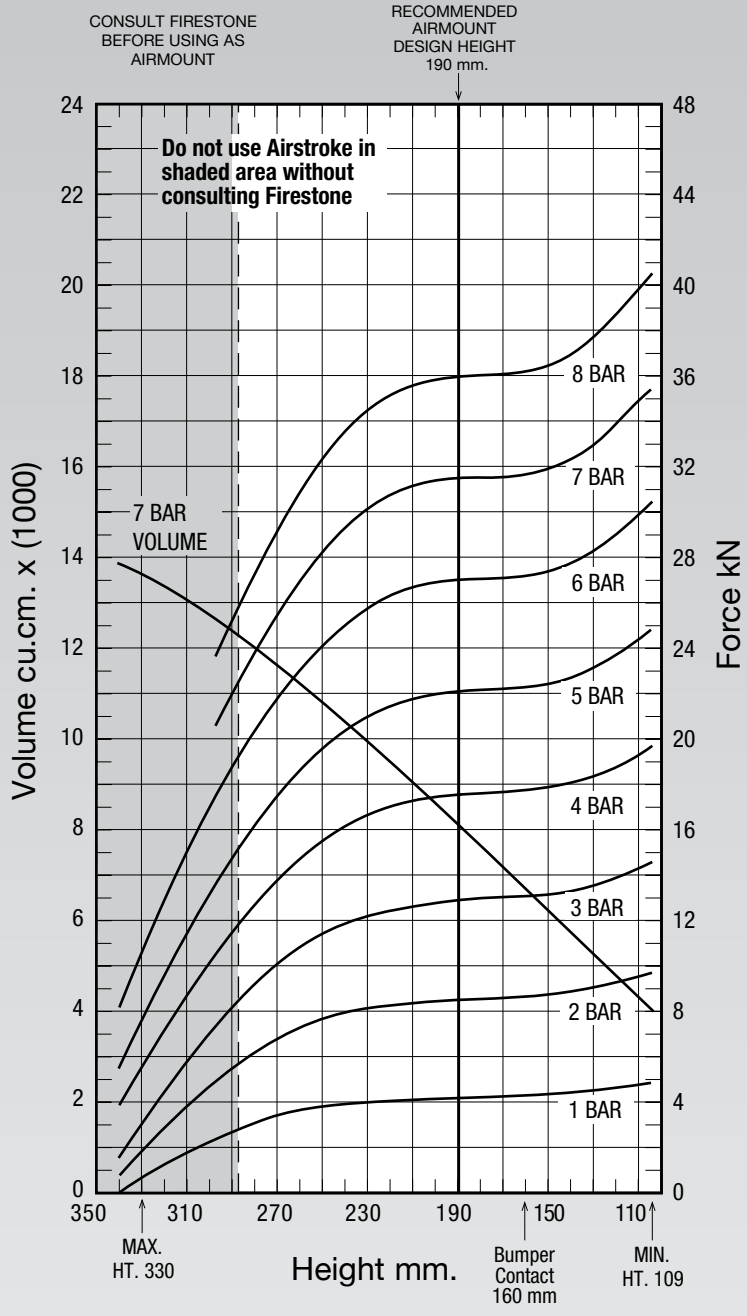

See page 12 for instructions on how to use chart.

Dynamic Characteristics at 190 mm Design Height
(Required for Airmount isolator design only)

Gauge Pressure (BAR)	Load (kN)	Spring Rate (kN/m)	Natural Frequency Hz
3	12.85	149	1.70
4	17.59	189	1.63
5	22.14	228	1.60
6	27.03	270	1.58
7	31.53	307	1.56

Force Table (Use for Airstroke™ actuator design)

Assembly Height (mm)	Volume @ 7 BAR (cu cm)	EFF Area @ 7 BAR (cm sq)	kN Force @ 3 BAR	@ 4 BAR	@ 5 BAR	@6 BAR	@7 BAR
280	12080	337	9.10	12.52	15.98	19.99	23.58
260	11314	382	10.70	14.55	18.42	22.79	26.76
240	10488	417	11.79	16.07	20.26	24.90	29.16
220	9611	438	12.44	17.03	21.44	26.26	30.68
200	8667	449	12.76	17.50	22.01	26.90	31.39
180	7694	451	12.90	17.64	22.19	27.09	31.59
160	6704	453	13.02	17.73	22.31	27.22	31.73
140	5712	462	13.29	18.05	22.72	27.74	32.34

1T15M-2 Firestone AIRSTROKE ACTUATORS AIRMOUNT ISOLATORS

NOTE: All Assembly Order Numbers are for bead plate parts unless noted otherwise.

	Description	Assembly Order No.
Style	Blind nuts, 1/4 BSP, bumper	W01-M58-6273
1T15M-2	Blind nuts, 3/4 BSP	W01-M58-6270
Two Ply Bellows	Blind nuts, 3/4 BSP, bumper	W01-M58-6271
Assembly weight ..... 5.99 kg.		

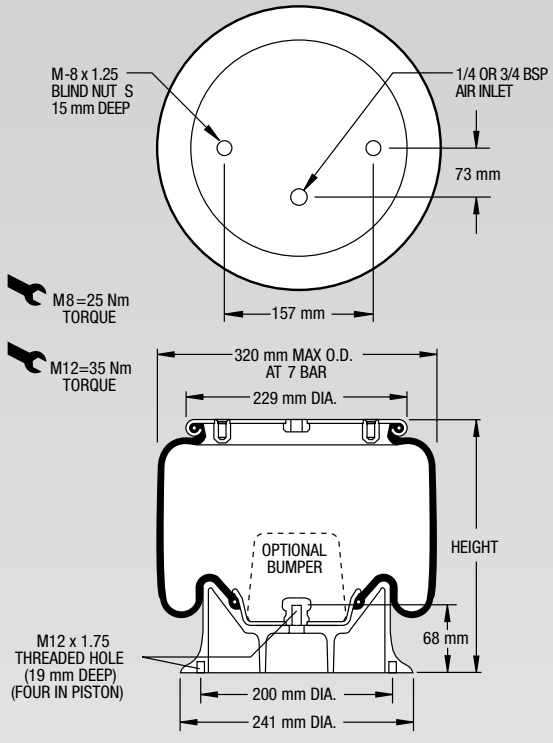

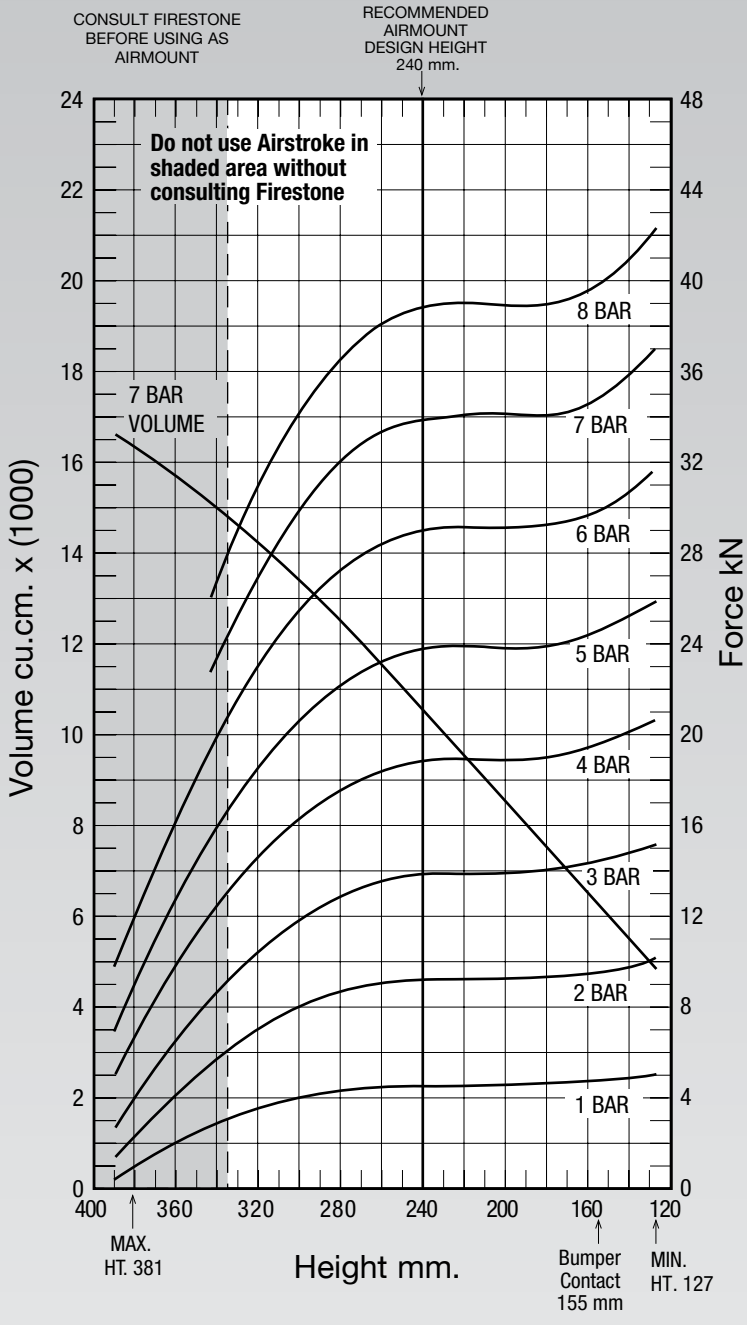

NOTE: Bellows will not compress properly with less than .7 BAR internal pressure.

NOTE: A bead plate part is shown. This part is also available with a bead ring. Bolts are not included. See pages 8-10 for explanation.

See page 12 for instructions on how to use chart.

Dynamic Characteristics at 240 mm Design Height
(Required for Airmount isolator design only)

Gauge Pressure (BAR)	Load (kN)	Spring Rate (kN/m)	Natural Frequency Hz
3	13.74	128	1.52
4	18.78	166	1.48
5	23.70	201	1.45
6	29.05	238	1.43
7	33.91	271	1.41

Force Table (Use for Airstroke™ actuator design)

Assembly Height (mm)	Volume @ 7 BAR (cu cm)	EFF Area @ 7 BAR (cm sq)	kN Force @ 3 BAR	@ 4 BAR	@ 5 BAR	@6 BAR	@7 BAR
300	13442	423	11.82	16.18	20.46	25.24	29.59
280	12542	454	12.83	17.51	22.11	27.18	31.80
260	11597	475	13.45	18.36	23.17	28.43	33.22
240	10616	485	13.74	18.78	23.70	29.05	33.91
220	9613	486	13.82	18.90	23.85	29.19	34.05
200	8562	486	13.83	18.90	23.85	29.19	34.05
180	7512	486	13.90	18.97	23.90	29.20	34.05
160	6473	492	14.15	19.30	24.27	29.59	34.46

NOTE: All Assembly Order Numbers are for bead plate parts unless noted otherwise.

	Description	Assembly Order No.
Style 1T15M-4 Two Ply Bellows	Blind nuts, 1/4 BSP	W01-M58-6284
	Blind nuts, 1/4 BSP, bumper	W01-M58-6283
	Blind nuts, 3/4 BSP	W01-M58-6280
Assembly weight ..... 6.49 kg.		

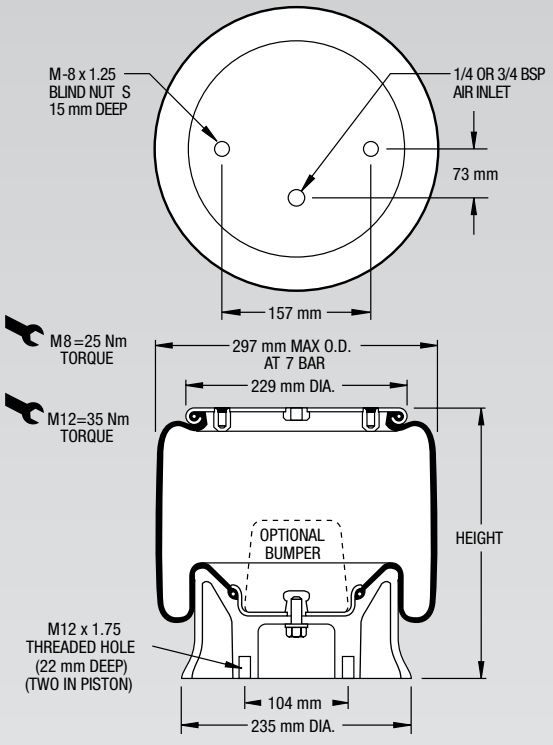

NOTE: Bellows will not compress properly with less than .7 BAR internal pressure.

NOTE: A bead plate part is shown. This part is also available with a bead ring. Bolts are not included. See pages 8-10 for explanation.

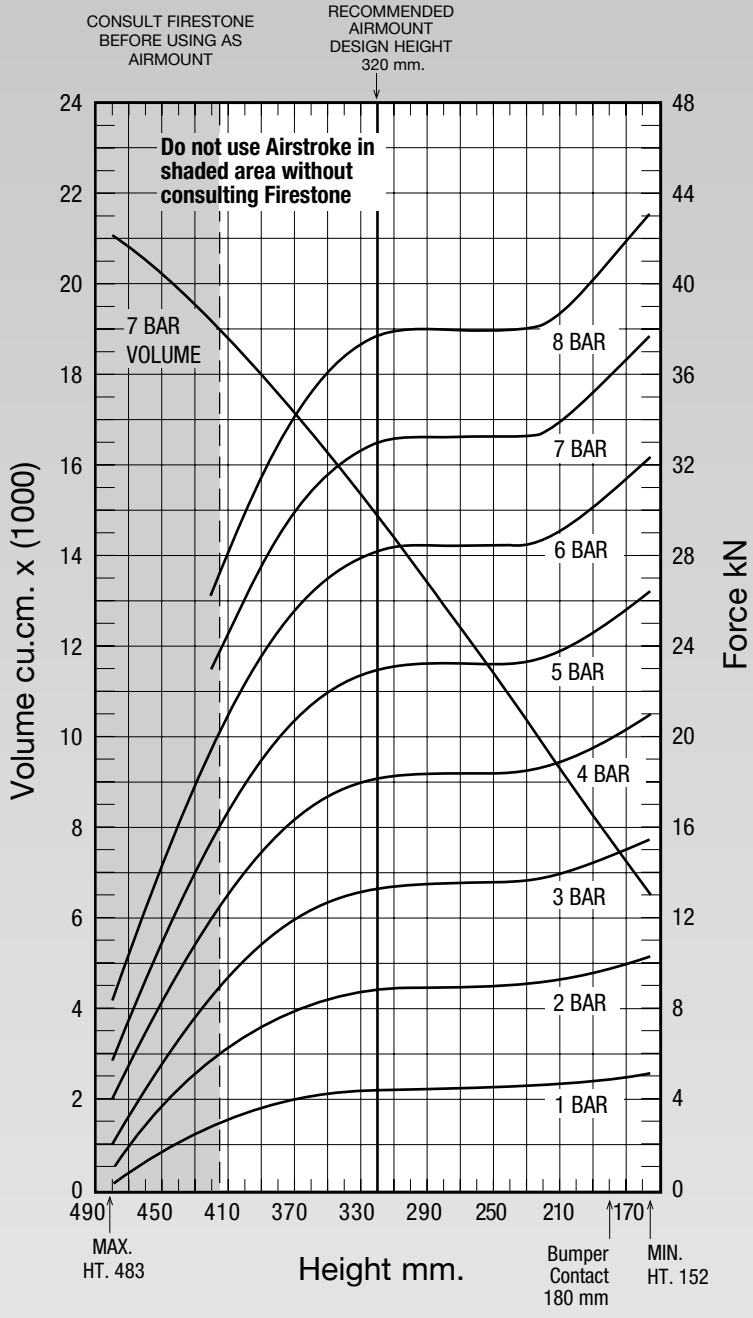

See page 12 for instructions on how to use chart.

Dynamic Characteristics at 320 mm Design Height
(Required for Airmount isolator design only)

Gauge Pressure (BAR)	Load (kN)	Spring Rate (kN/m)	Natural Frequency Hz
3	13.30	94	1.33
4	18.18	121	1.29
5	22.97	147	1.26
6	28.21	173	1.24
7	32.97	198	1.22

Force Table (Use for Airstroke™ actuator design)

Assembly Height (mm)	Volume @ 7 BAR (cu cm)	EFF Area @ 7 BAR (cm sq)	kN Force @ 3 BAR	@ 4 BAR	@ 5 BAR	@6 BAR	@7 BAR
400	18412	371	10.00	13.84	17.67	22.06	25.95
360	16746	439	12.25	16.79	21.27	26.24	30.73
320	14853	471	13.30	18.18	22.97	28.21	32.97
280	12874	475	13.48	18.41	23.23	28.47	33.24
240	10870	475	13.53	18.41	23.23	28.47	33.24
200	8827	491	14.11	19.11	24.09	29.47	34.39
160	6803	533	15.26	20.70	26.12	32.00	37.34

1T15M-6 Firestone

NOTE: All Assembly Order Numbers are for bead plate parts unless noted otherwise.

	Description	Assembly Order No.
Style 1T15M-6	Blind nuts, 1/4 BSP	W01-M58-6290
Two Ply Bellows	Blind nuts, 3/4 BSP	W01-M58-6292
Assembly weight ..... 7.12 kg.		

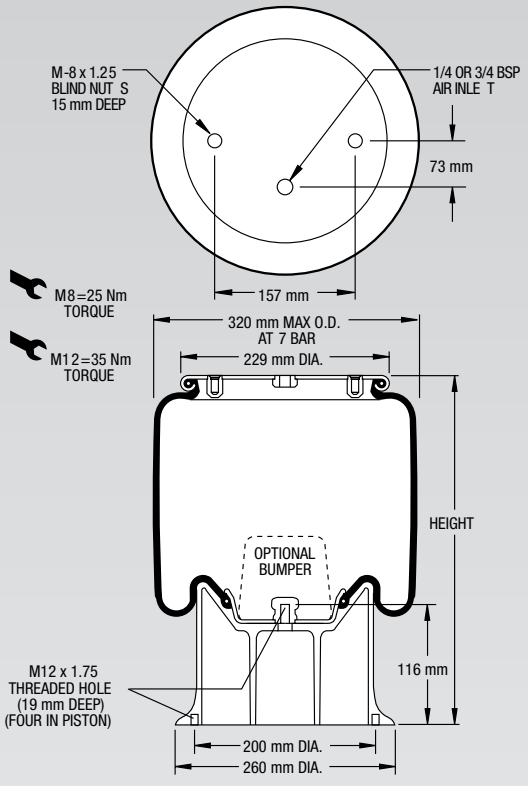

NOTE: Bellows will not compress properly with less than .7 BAR internal pressure.

NOTE: A bead plate part is shown. This part is also available with a bead ring. Bolts are not included. See pages 8-10 for explanation.

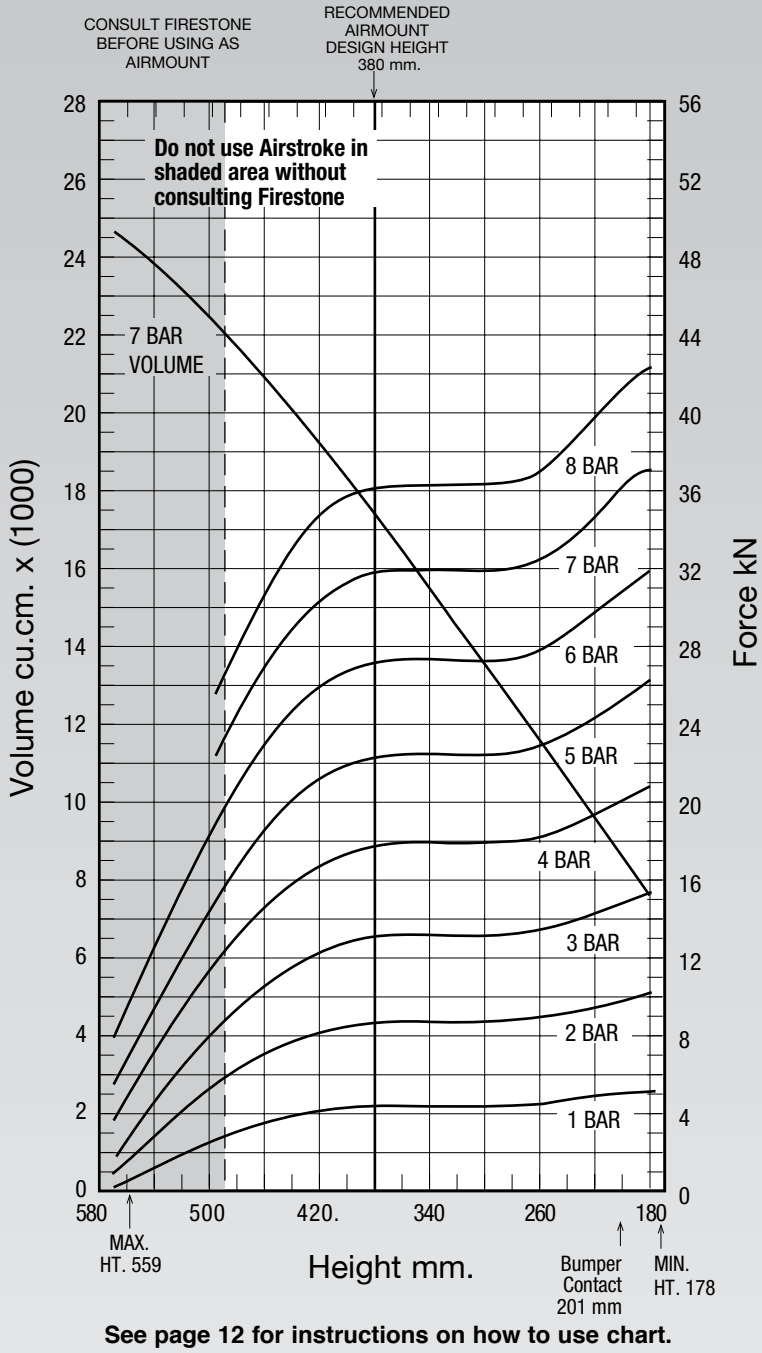

See page 12 for instructions on how to use chart.

Dynamic Characteristics at 380 mm Design Height
(Required for Airmount isolator design only)

Gauge Pressure (BAR)	Load (kN)	Spring Rate (kN/m)	Natural Frequency Hz
3	13.01	72	1.18
4	17.68	93	1.14
5	22.25	111	1.11
6	27.16	129	1.09
7	31.66	147	1.07

Force Table (Use for Airstroke™ actuator design)

Assembly Height (mm)	Volume @ 7 BAR (cu cm)	EFF Area @ 7 BAR (cm sq)	kN Force @ 3 BAR	@ 4 BAR	@ 5 BAR	@6 BAR	@7 BAR
480	21723	347	9.30	12.91	16.49	20.60	24.25
440	20080	410	11.50	15.70	19.88	24.52	28.70
400	18349	445	12.73	17.31	21.82	26.70	31.16
360	16512	454	13.11	17.82	22.40	27.29	31.79
320	14536	454	13.12	17.83	22.40	27.29	31.79
280	12544	454	13.12	17.83	22.40	27.29	31.79
240	10569	476	13.72	18.54	23.35	28.53	33.28
200	8579	515	14.81	20.02	25.24	30.88	36.02

NOTE: All Assembly Order Numbers are for bead plate parts unless noted otherwise.

	Description	Assembly Order No.
Style 1T15M-9	Blind nuts, 1/4 NPT	W01-358-9108
	Blind nuts, 1/4 NPT, bumper	W01-M58-6305
Two Ply Bellows	Blind nuts, 3/4 NPT	W01-M58-6300
	Blind nuts, 3/4 NPT, bumper	W01-M58-6301
Assembly weight ..... 8.16 kg.		

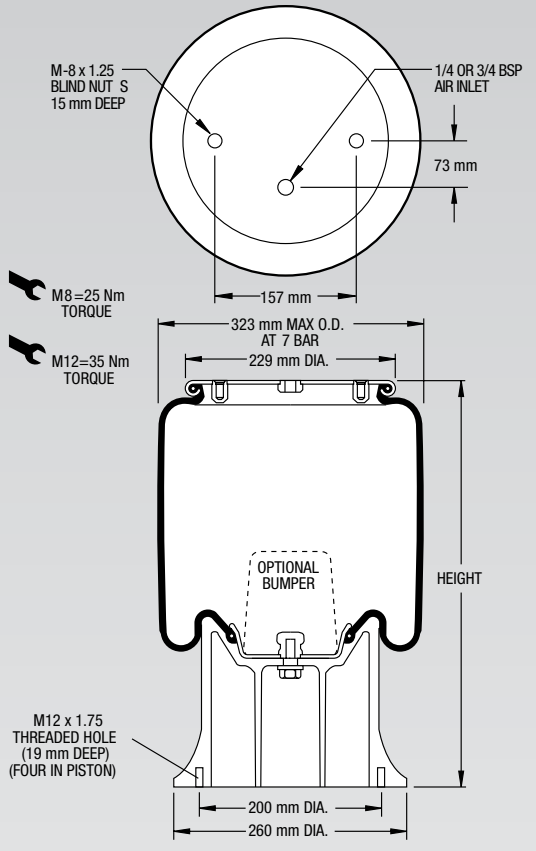

NOTE: Bellows will not compress properly with less than .7 BAR internal pressure.

NOTE: A bead plate part is shown. This part is also available with a bead ring. Bolts are not included. See pages 8-10 for explanation.

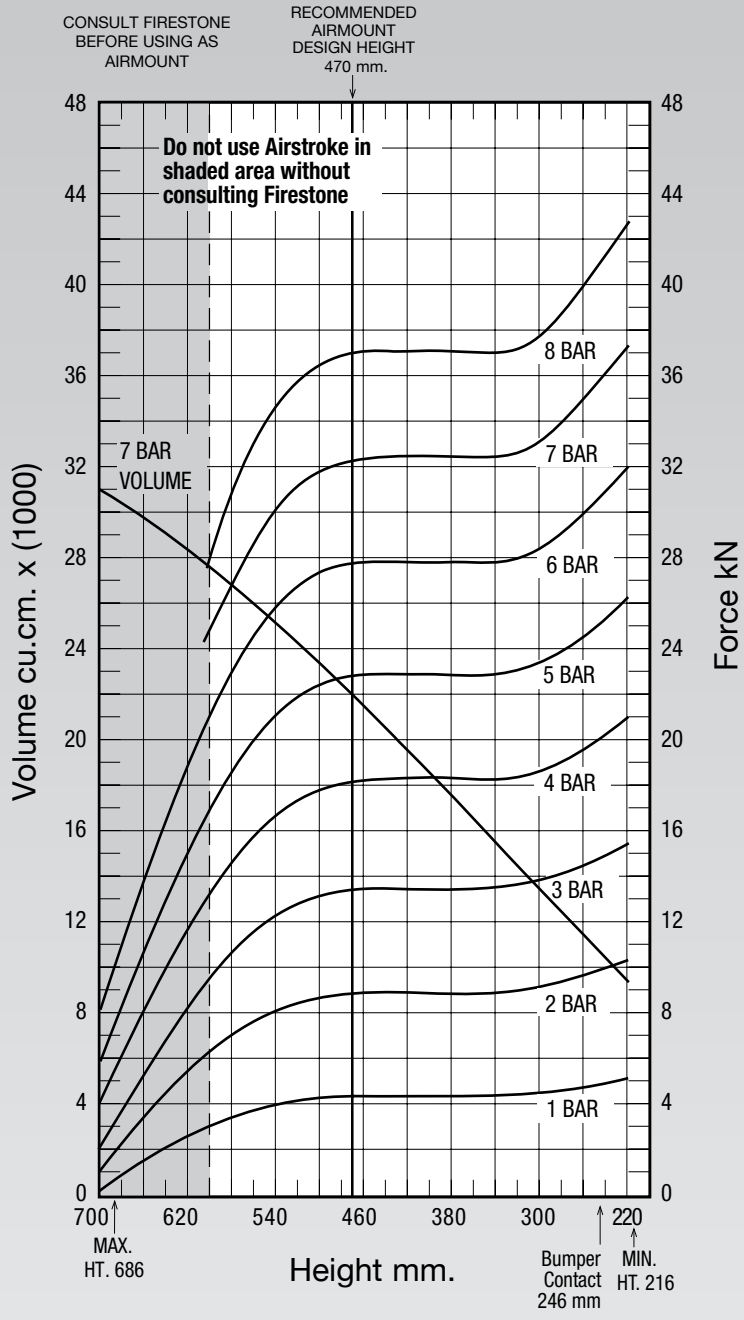

See page 12 for instructions on how to use chart.

Dynamic Characteristics at 470 mm Design Height
(Required for Airmount isolator design only)

Gauge Pressure (BAR)	Load (kN)	Spring Rate (kN/m)	Natural Frequency Hz
3	13.36	60	1.05
4	18.21	78	1.03
5	22.82	92	1.00
6	27.76	107	.98
7	32.35	121	.96

Force Table (Use for Airstroke™ actuator design)

Assembly Height (mm)	Volume @ 7 BAR (cu cm)	EFF Area @ 7 BAR (cm sq)	kN Force @ 3 BAR	@ 4 BAR	@ 5 BAR	@6 BAR	@7 BAR
560	26024	411	11.50	15.68	19.84	24.50	28.73
520	24282	446	12.75	17.33	21.81	26.70	31.20
480	22386	461	13.30	18.12	22.72	27.67	32.25
440	20414	463	13.41	18.29	22.90	27.81	32.40
400	18453	463	13.41	18.29	22.90	27.81	32.40
360	16464	463	13.41	18.29	22.90	27.81	32.40
320	14405	465	13.59	18.33	22.99	27.94	32.52
280	12395	485	14.10	19.06	23.94	29.14	33.94

1T19L-7 Firestone AIRSTROKE ACTUATORS AIRMOUNT ISOLATORS

NOTE: All Assembly Order Numbers are for bead plate parts unless noted otherwise.

	Description	Assembly Order No.
Style 1T19L-7 Two Ply Bellows	Blind nuts, 1/4 NPT	W01-358-9148
	Blind nuts, 1/4 NPT, bumper	W01-358-9149
	Blind nuts, 3/4 NPT	W01-358-9172
	Blind nuts, 3/4 NPT, bumper	W01-358-9160
	Countersunk steel bead ring 1¾ bolts, nuts, washers	W01-358-9165
Assembly weight ..... 11.16 kg.		

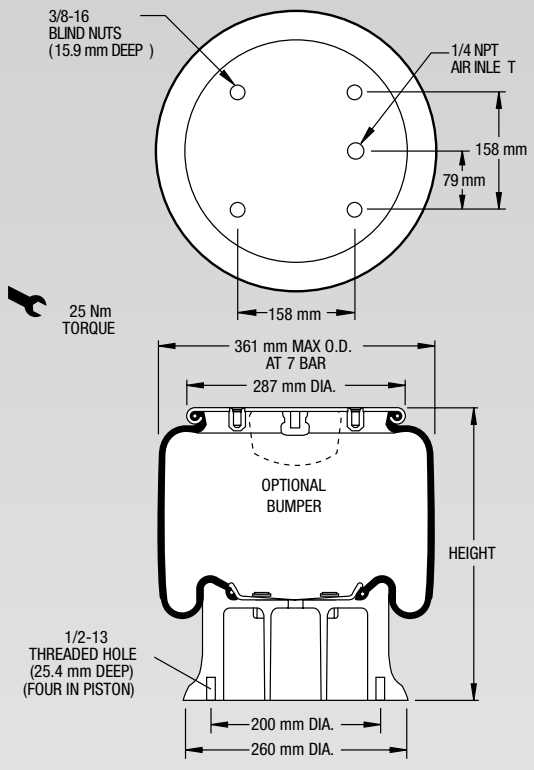

NOTE: Bellows will not compress properly with less than .7 BAR internal pressure.

NOTE: A bead plate part is shown. This part is also available with a bead ring. Bolts are not included. See pages 8-10 for explanation.

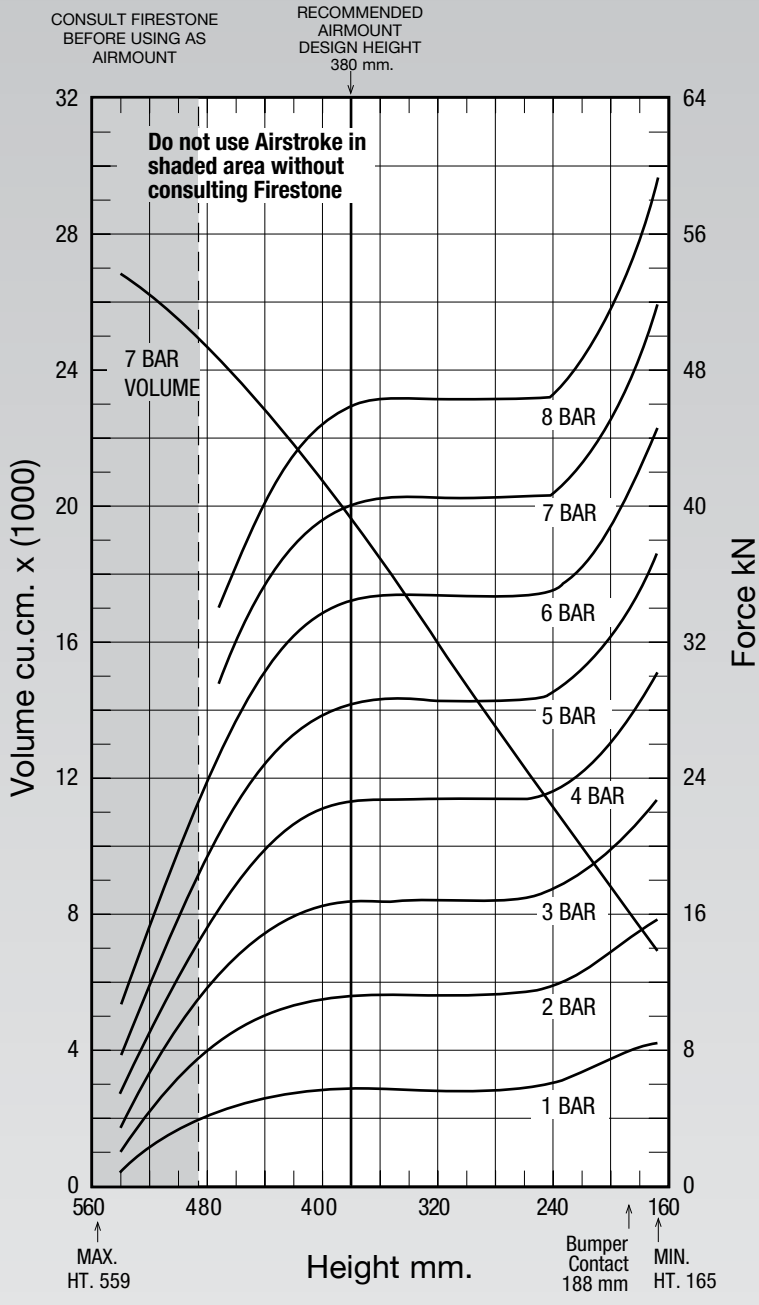

See page 12 for instructions on how to use chart.

Dynamic Characteristics at 380 mm Design Height
(Required for Airmount isolator design only)

Gauge Pressure (BAR)	Load (kN)	Spring Rate (kN/m)	Natural Frequency Hz
3	16.82	98	1.20
4	22.64	128	1.18
5	28.37	155	1.17
6	34.49	186	1.16
7	40.18	215	1.15

Force Table (Use for Airstroke™ actuator design)

Assembly Height (mm)	Volume @ 7 BAR (cu cm)	EFF Area @ 7 BAR (cm sq)	kN Force @ 3 BAR	@ 4 BAR	@ 5 BAR	@6 BAR	@7 BAR
460	23795	454	13.44	17.70	22.22	27.17	31.77
420	21800	536	15.94	21.20	26.54	32.23	37.53
380	19624	574	16.82	22.64	28.37	34.49	40.18
340	17263	580	16.84	22.78	28.56	34.78	40.56
300	14779	580	16.84	22.78	28.56	34.78	40.56
260	12355	580	16.85	22.78	28.56	34.78	40.56
220	9981	606	18.44	24.34	30.28	36.48	42.38
180	7648	698	21.43	28.27	35.08	42.10	48.84

Firestone 1T19L-11

NOTE: All Assembly Order Numbers are for bead plate parts unless noted otherwise.

	Description	Assembly Order No.
Style 1T19L-11	Blind nuts, 1/4 NPT	W01-358-9155
	Blind nuts, 1/4 NPT, bumper	W01-358-9156
Two Ply Bellows	Blind nuts, 3/4 NPT	W01-358-9153
	Blind nuts, 3/4 NPT, bumper	W01-358-2132
	Countersunk steel bead ring, 1 3/4 bolts, nuts, washers	W01-358-9162
Assembly weight ..... 10.25 kg.		

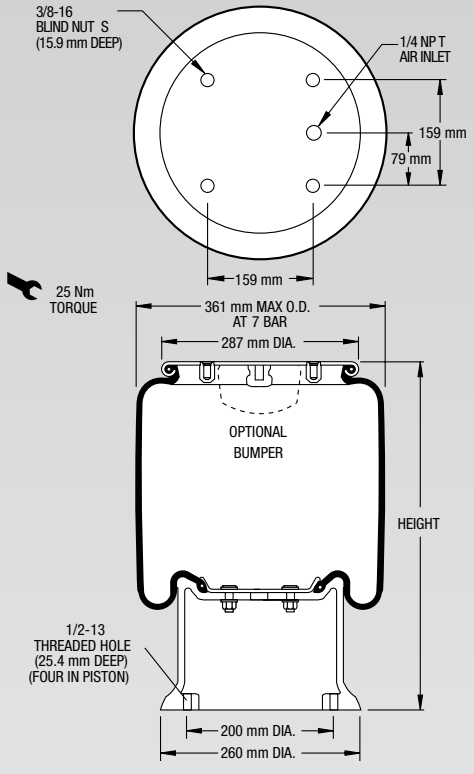

NOTE: Bellows will not compress properly with less than .7 BAR internal pressure.

NOTE: A bead plate part is shown. This part is also available with a bead ring. Bolts are not included. See pages 8-10 for explanation.

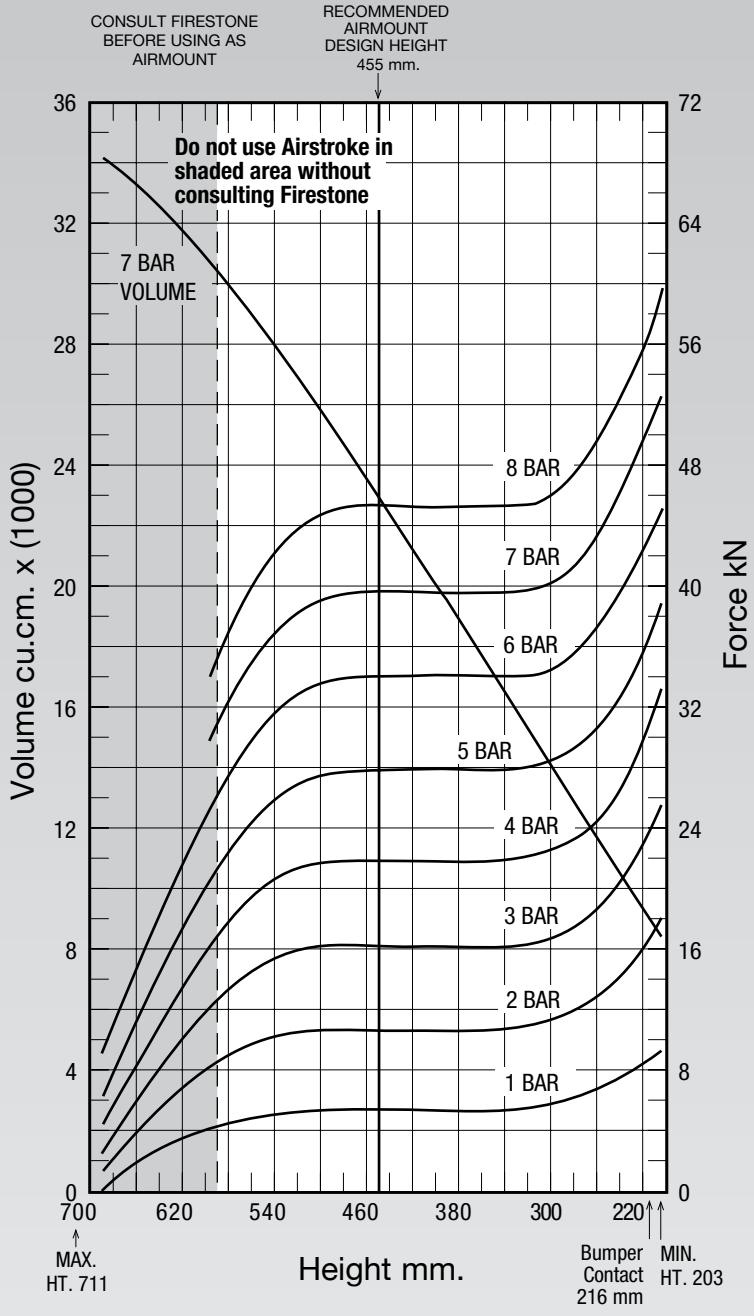

See page 12 for instructions on how to use chart.

Dynamic Characteristics at 455 mm Design Height
(Required for Airmount isolator design only)

Gauge Pressure (BAR)	Load (kN)	Spring Rate (kN/m)	Natural Frequency Hz
3	16.22	76	1.08
4	21.90	96	1.04
5	27.77	117	1.02
6	34.04	140	1.01
7	39.63	160	1.00

Force Table (Use for Airstroke™ actuator design)

Assembly Height (mm)	Volume @ 7 BAR (cu cm)	EFF Area @ 7 BAR (cm sq)	kN Force @ 3 BAR	@ 4 BAR	@ 5 BAR	@ 6 BAR	@ 7 BAR
580	29938	462	13.45	18.02	22.57	27.62	32.34
540	28011	525	15.32	20.56	25.83	31.49	36.72
500	25891	557	16.09	21.66	27.35	33.44	38.95
460	23607	566	16.22	21.90	27.77	34.03	39.62
420	21262	566	16.22	21.90	27.77	34.04	39.63
380	18895	566	16.22	21.90	27.77	34.04	39.63
340	16461	566	16.22	21.94	27.80	34.04	39.63
300	13995	575	16.79	22.58	28.40	34.58	40.25